Beck+Heun
BESTE WERTE FÜRS HAUS

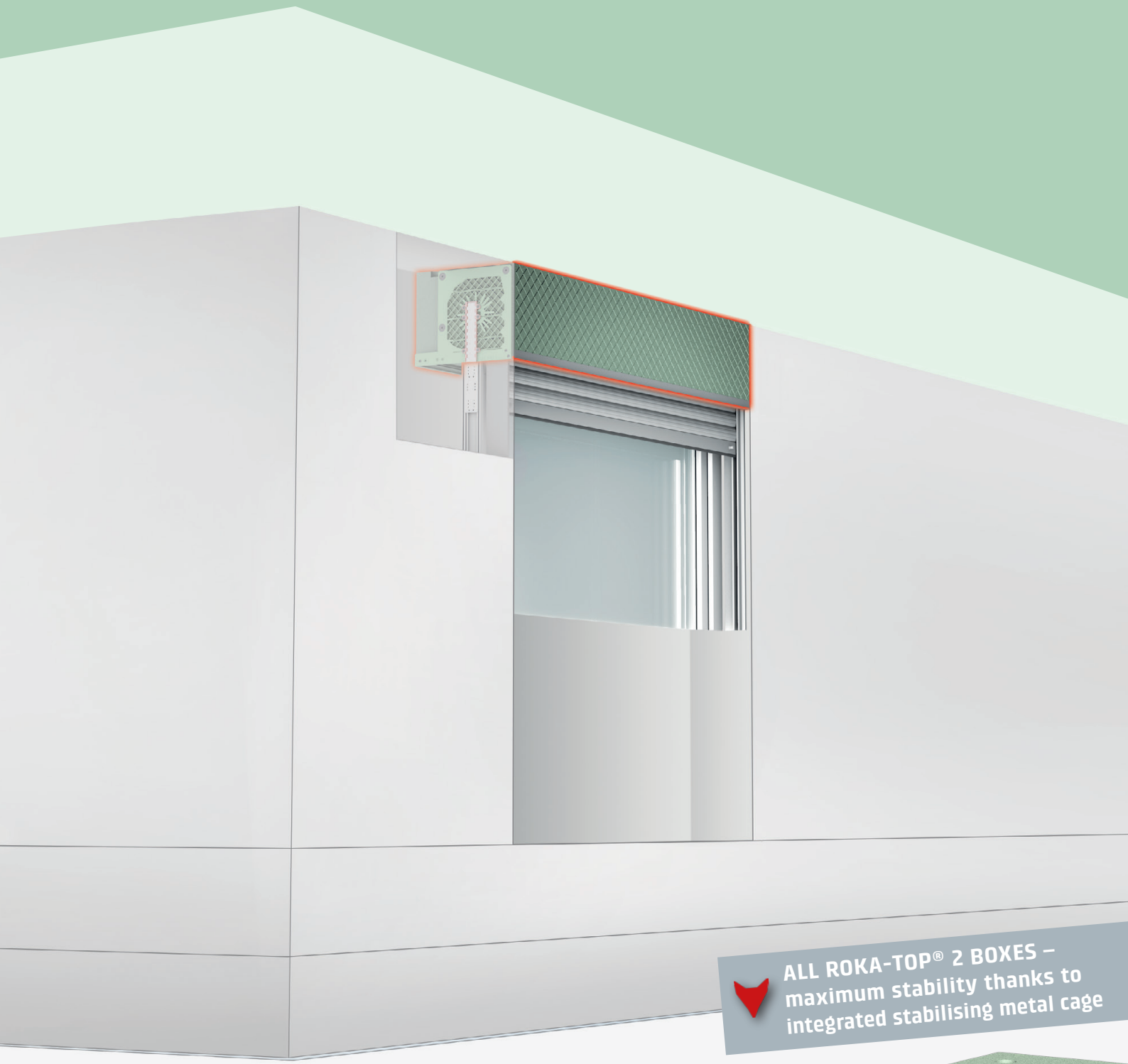

ALL ROKA-TOP® 2 BOXES –
maximum stability thanks to
integrated stabilising metal cage

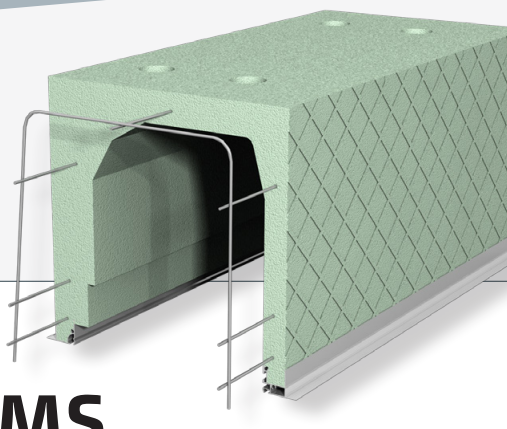

TOP-MOUNTED BOX SYSTEMS



THE BECK+HEUN COMPANY

People. Values. Visions.

Beck+Heun is the European leader in the development, manufacture and installation of highly energy-efficient systems around the window. Success is guaranteed above all by continuous dialogue with customers and short decision-making processes. Products from the Beck+Heun brand are among the highest quality and most innovative on the market. In addition, the manufacturer offers by far the largest variety of variants and is extremely flexible with regard to the manufacturing of custom solutions. When it comes to product management, the aim is always to achieve the greatest possible benefit for all customers – for planners and fitters as well as dealers and users. The entire cycle of action is ploughed into product development – from planning to delivery to installation, and ultimately to operation.

The family-owned company was founded in 1962 and has around 600 employees today. They work at a total of three locations in Germany. The Beck+Heun GmbH headquarters are located in Mengerskirchen. They are supplemented by specialised production and distribution locations in Erfurt and Altenmünster (near Augsburg). Each location has its own field service team. Together they cover all of Germany and enable direct on-site customer support. Beyond Germany's borders, Beck+Heun already exports to more than 23 countries – and that number is growing larger year by year. Local distribution partners are available in many of them.

FACTS AND FIGURES

- Founded in 1962
- Around 600 employees
- 3 Locations in Germany
- Worldwide export through numerous distribution partners

WE HELP IN EVERY SITUATION
Competent contact persons are at your side

YOUR CONTACT PERSON

You will find the right contact person for all your concerns, quickly and easily on our website: export.beck-heun.de

HOTLINE

For further information please contact our export department by telephone:
T. +39 (0) 508052016
M. +39 (0) 3665963076

or by email:
export@beck-heun.de



MARCO LOCATI

Commercial Manager
Southern Europe

Locations in Germany



Beck+Heun GmbH
Headquarters
Reinhold-Beck-Strasse 2
D-35794 Mengerskirchen



Beck+Heun GmbH
South Branch
Industriestrasse 2
D-86450 Altenmünster



Beck+Heun GmbH
Erfurt Branch
Stotternheimer Strasse 10
D-99086 Erfurt

ROKA-TOP® 2 TOP-MOUNTED ROLLER SHUTTER BOXES

Beck+Heun has been developing top-mounted boxes of the ROKA-TOP® brand for over 20 years. The shading elements, which are fully equipped with blind and drive technology, ensure a noticeable reduction in the number of trades and minimise sources of error, especially during planning. Beck+Heun supplies the right top-mounted box system for virtually every application.



UNBEATABLE VARIETY OF THE CLASSIC TOP-MOUNTED BOX

The variants from the ROKA-TOP® 2 series

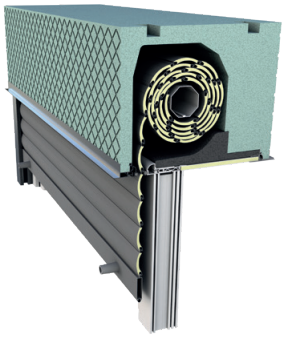

ROKA-TOP® 2 PLUS

- Latest top-mounted box system with closing cover and adjustable reveal
- Air-tightness guaranteed
- Force-fit connection to the window frame – mounted in just one step

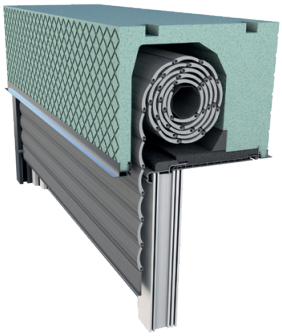

ROKA-TOP® 2

- Proven top-mounted box system
- Closing cover with insulation and stepped rebate connection to reveal
- On-site crossbars with own verification possible

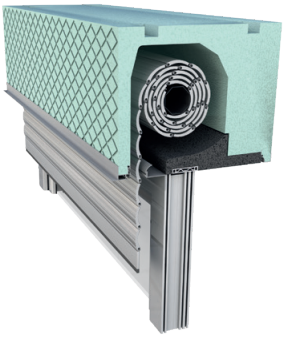

ROKA-TOP® 2 RG

- Closed and jointless on the room side
- Variable inspection opening
- Screw connection between window frame and box
- Two-piece aluminium guide rail system

One product system, many advantages

Unique mounting concept

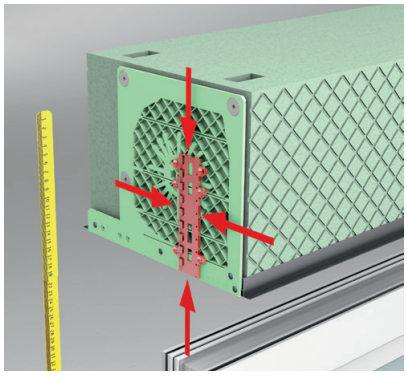

Precisely preassembled

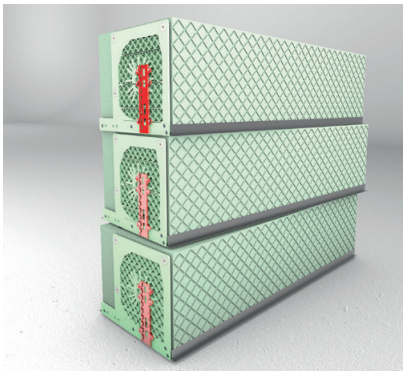

Space-saving transport

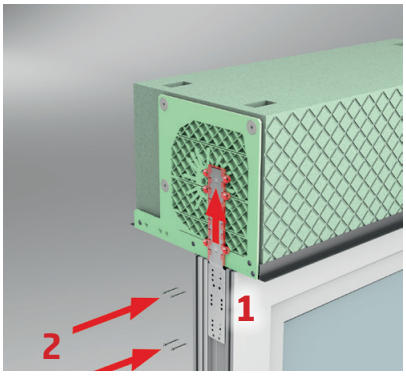

Fast installation

Innovative hybrid foaming process

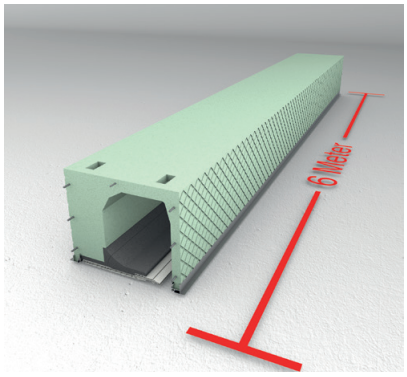

Six metres from a single moulding

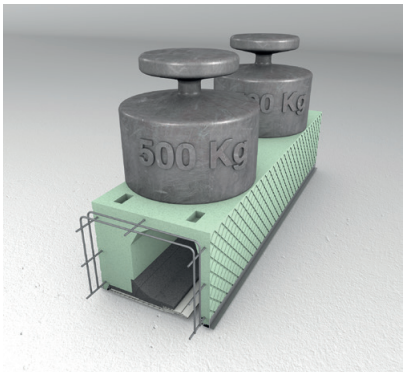

Integrated stabilising metal cage

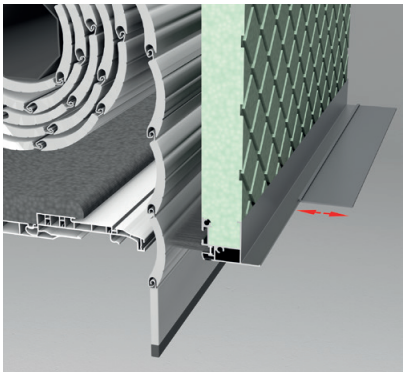

Foamed-in end rails (optional extra profile)

All ROKA-TOP® 2 boxes – maximum stability thanks to integrated stabilising metal cage

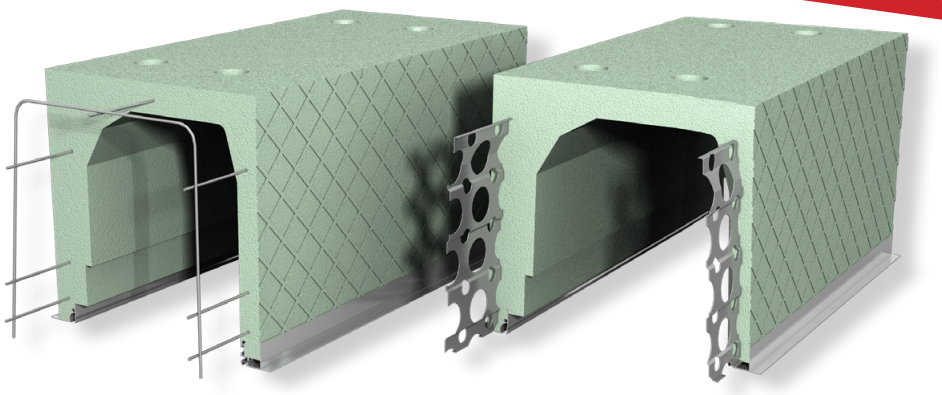

FURTHER ADVANTAGES OF ROKA-TOP® 2

ROKA-TOP® 2 RG (closed on room side, inspection from outside)

- highest thermal and acoustic parameters of any solutions used in this area
- very high air-tightness and very good noise protection
- option to install interior cover with plaster or tiles – no joints
- broad range of applications – also for HS doors
- equipped with steel reinforcement from a box length of 1.75 m – in any case according to the customer's wishes
- option to use an integrated stabilising bracket for HS doors and large window and roller shutter areas
- compliance with wind resistance classes C4 and C3 - EN 1991-1-4
- use of reinforcements with amour partitions – installation by means of screwing to the lintel
- no intervention from the room in case of motor failure – inspection from outside through guide rails
- sealing of the window frame in the area of the guide rails – sealing against the ingress of moisture and better acoustic parameters
- guide rails can be powder-coated or foil-wrapped to match the colour of the window profiles
- option to use any drive method: motor, strap or crank

Planning documents in the technical portal:
https://www.beck-heun.tech/index.php/apps/files/?dir=/PLANUNGSUNTERLAGEN/AUFSATZK%C3%84STEN/Rollladen/ROKA-TOP%202%20RG&fileid=8337

ROKA-TOP® 2 (inspection from inside)

- highest thermal and acoustic parameters
- wide range of applications
- high torsional rigidity due to steel reinforcement in the box and aluminium carrier
- option of additional stabilisation in the box by dividing the blind
- simple and quick installation by placing the box on top of the window – metal hooks
- no assembly at the company (fitting of blind and drive only)
- it is not necessary to keep a stock of raw materials for the production
- no production waste or waste due to design changes with PVC systems
- complete top-mounted box with inspection from inside
- very aesthetic closing profile
- high rigidity and resistance to extreme temperatures – no deformation
- high recognition of the Beck+Heun brand throughout Europe
- option to use an insect screen
- one universal side for all top-mounted boxes
- maximum roll diameter for the armour in all boxes – roll diameter of 215 with box height 300, roll diameter of 185 with box height 250
- option to use any installation method
- Roka Rubo square and semi-circular box available

Planning documents in the technical portal:
https://www.beck-heun.tech/index.php/apps/files/?dir=/PLANUNGSUNTERLAGEN/AUFSATZK%C3%84STEN/Rollladen/ROKA-TOP%202&fileid=8248

BUILDING PHYSICS WITH TOP GRADES



ROKA-TOP® 2 PLUS has a completely closed Neopor® sealing level above the closing cover. There are no gaps in the system. The result is a highly airtight top-mounted box with optimal values for thermal and noise insulation. Insulation values improved by more than 20 percent and noise insulation properties of up to Rw = 45 decibels speak for themselves. A special noise insulating cover is available for this in place of the standard cover. A new noise insulating strip on the outer leg also contributes to the top values. Heavy foils in the roll chamber can be dispensed with.

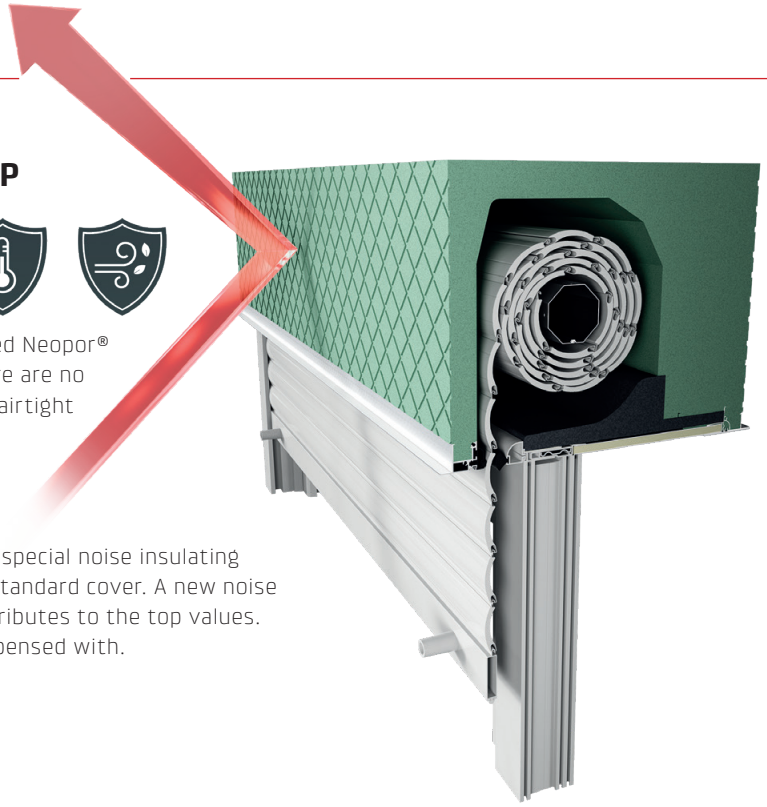

SAFE ALL-ROUND

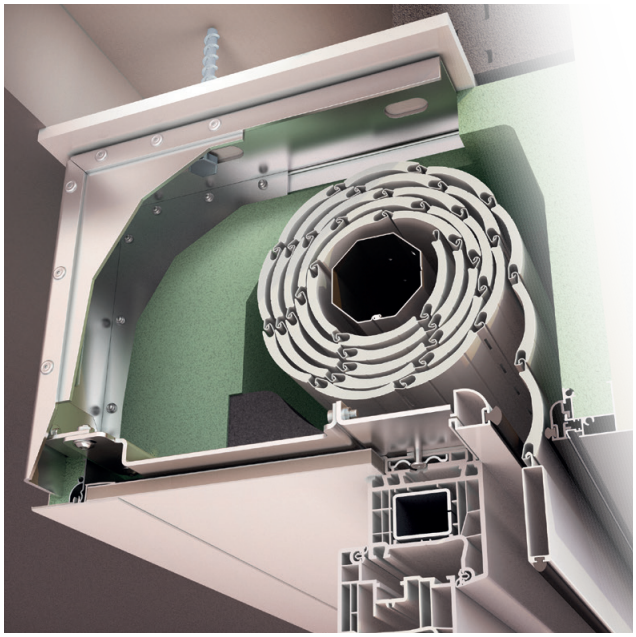

STABILUM SK for ROKA-TOP® 2 PLUS

- The tested premium solution among the stabilising brackets
- All-round window fastening according to RAL guidelines
- Secure dissipation of wind and impact loads
- Permanently connected to the building structure

Since the topic of statics and reinforcement is subject to constant further development, please refer to the BECK+HEUN technical portal for the available versions.

www.beck-heun.tech

More details for the STABILUM on page 34

ROKA-TOP® 2 PLUS

Closing cover box with EXTRA performance (PLUS)

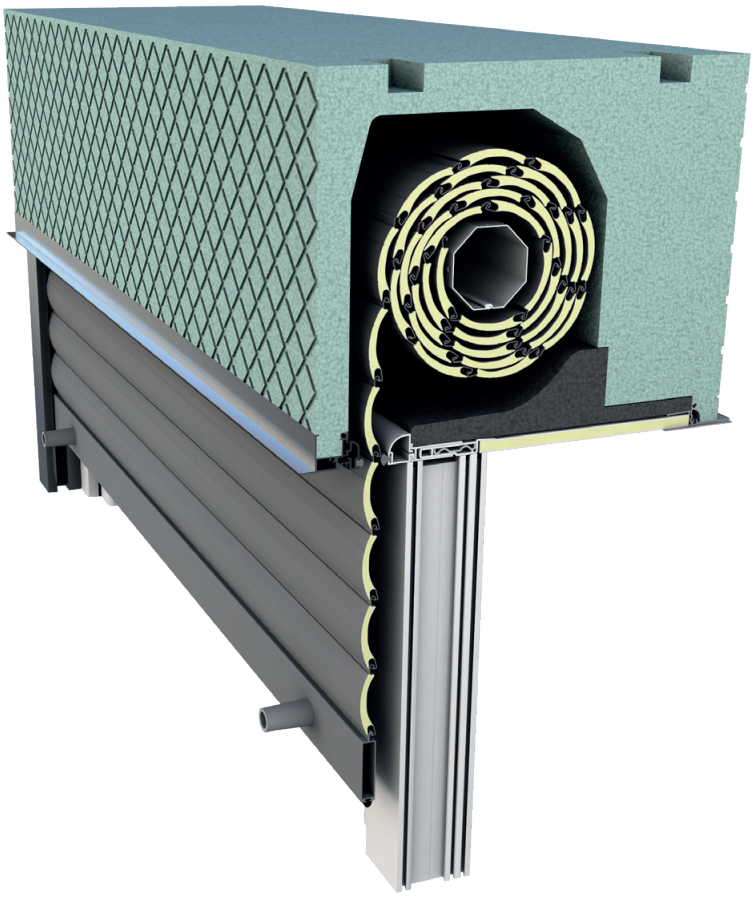

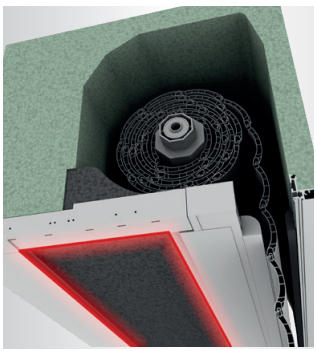

Tighter than ever before
Closing covers serve the purpose of inspection and have system-related joints. In the ROKA-TOP® 2 PLUS these are optimally enclosed in the insulating and sealing layer. The air-tightness is simple to restore, even after opening the system later on.



Installation-friendly closing cover
Every fitter likes straight cuts. The new 3-ply closing cover is not only highly insulating: on account of the adjustable reveal, a stepped rebate to the lateral reveal connection can be dispensed with. If the closing cover does have to be processed on the building site, however, the straight cuts make this possible.

THE INSTALLATION MAKES THE DIFFERENCE

The closing cover box is popular due to the good accessibility of the box interior from the room side. However, this comes at a cost, for example with regard to thermal insulation, noise protection or air-tightness. It is precisely these points that the ROKA-TOP® 2 PLUS addresses. The new closing cover top-mounted box does not compromise. How is that possible? Through numerous EXTRA (PLUS) new product details.

In addition to the achievement of top values in terms of building physics, the development of the new system concentrated on offering convenient installation. ROKA-TOP® 2 PLUS makes do without additional connecting profiles to the window frame. It is installed in record time and in just one step.

NOISE INSULATION VALUES UP TO Rw = 47 dB

EXTRA (PLUS) features:	
Thermal insulation:	Thermal insulation values improved by up to 20 percent
Noise protection:	Increase in airborne sound insulation by up to 15 percent
Air-tightness:	Tested air-tightness guaranteed
Installation convenience:	Installed in just one step
Stability:	Enables a force-fit connection with the window

Dimensions and insulation values

Plaster (monolithic)

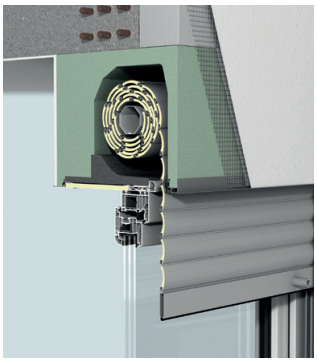

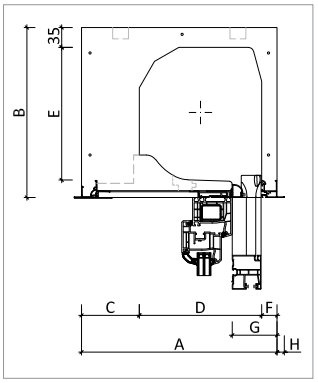

Plaster in ETICS

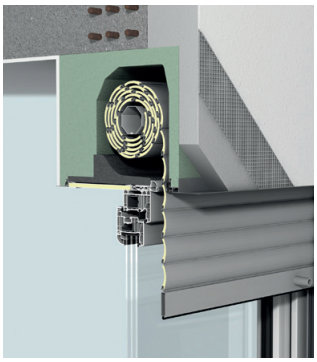

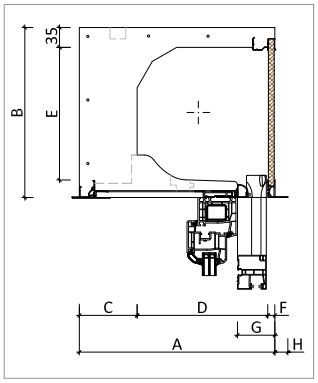

ETICS

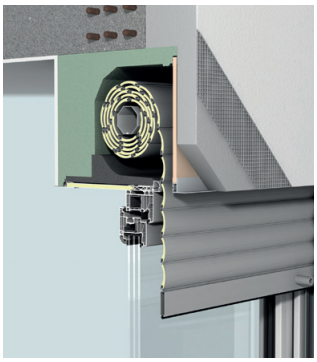

Brick



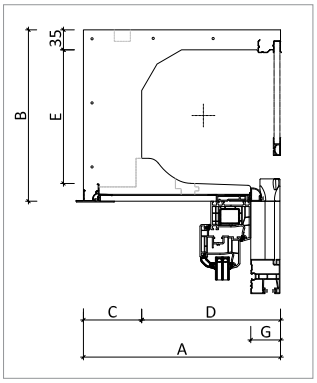

Window and blind – example illustration

THERMAL INSULATION VALUES taking the box width as an example	Plaster (monolithic) 365 mm	fig. 265[1)]	Plaster in ETICS 345 mm	fig. 274[1)]	ETICS 345 mm	fig. 274[1)]	Brick 345 mm	fig. 283[1)]
Ψ (Psi) in [W/(mK)]	-0.21	≤ 0.19	-0.21	≤ 0.12	-0.19	≤ 0.12	-0.18	≤ 0.11
f_{Rsi} [-]	0.78	≥ 0.70	0.78	≥ 0.70	0.76	≥ 0.70	0.77	≥ 0.70
U_{Sb} [W/(m²K)] (EN 10077:2012)	0.49	≤ 0.85	0.51	≤ 0.85	0.58	≤ 0.85	0.62	≤ 0.85
U_{Sb} [W/(m²K)] (EN 10077:2018)	0.51	≤ 0.85	0.53	≤ 0.85	0.57	≤ 0.85	0.60	≤ 0.85

Dimensions

	ROKA-TOP® 2 PLUS	Plaster version[2)]							ETICS version[2)]							Brick version[2)]						
A	Box width	240	250	260	280	300	345	365	240	250	260	280	300	345	365	240	250	260	280	300	345	365
B	Box height	250	250	250	250/300				250	250	250	250/300				250	250	250	250/300			
C	Leg thickness inside	27	37	47	37	57	102	122	27	37	47	37	57	102	122	27	37	47	37	57	102	122
D	Clearance width	186	186	186	216	216	216	216	200	200	200	230	230	230	230	200	200	200	230	230	230	230
E	Clearance height	184	184	184	184/234				184	184	184	184/234				184	184	184	184/234			
	Clearance internal dimension[3)]	184	184	184	184/216				184	184	184	184/216				184	184	184	184/216			
F	Leg thickness outside	27	27	27	27	27	27	27	13	13	13	13	13	13	13	0	0	0	0	0	0	0
G	Window seat from external side of box[4)]	78	78	78	78	78	78	78	64	64	64	64	64	64	64	51	51	51	51	51	51	51
H	End rail overhang outside	13	13	13	13	13	13	13	23	23	23	23	23	23	23	0	0	0	0	0	0	0
	ROKA-TOP® 2 PLUS	Standard: with reinforcement inlay – box end rail inside 13 mm																				

Dimensions in mm

[1)] With the coming into force in Germany of the GEG (Building Energy Act) in November 2020, supplementary sheet 2 to DIN 4108 from 2006 was replaced by the new supplementary sheet 2:2019-06.
Thermal values shown correspond to the latest requirements; reference values for (Psi) and f_{Rsi} are complied with. The system is considered an installation detail "equivalent to supplementary sheet 2".
Note: The top-mounted box was assigned in the calculations of the window area. Air layers according to EN 10077:2012 and EN 10077:2018

[2)] With smaller box widths, the feasibility is to be checked depending on the guide rail and window frame width. An adequate inspection opening must be ensured.

[3)] Theoretically available roll chamber -press measured- not considering installation clearance.

[4)] Dependent on guide rail installation depth; dimensions result from PVC guide rail 60 x 51 mm.

ROKA-TOP® 2

The classic top-mounted box with closing cover

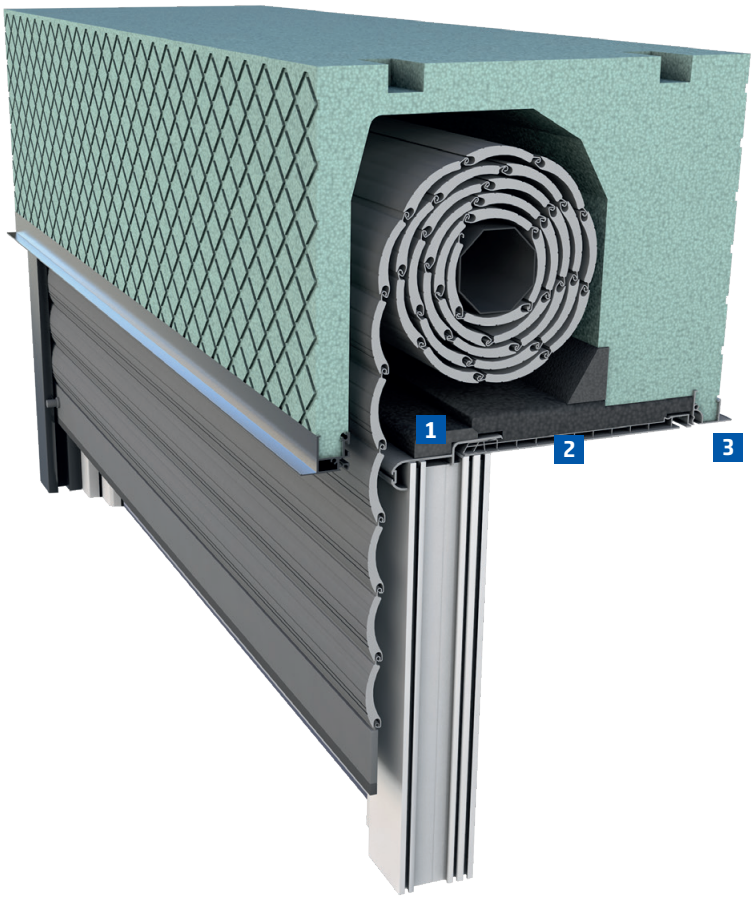

EXTRAS FOR SEALING

The standard version ROKA-TOP® 2 is fitted with a closing cover. A PVC inspection module with integrated foam block ensures insulation and appealing looks. It nestles against the closing cover when closing the box and seals the installation joint. Installation tolerances in the inspection area are concealed by the well-known stepped rebate between the side part and the closing cover. The result is a cleanly closed visible joint in the inspection area.

Note:
Please state the window profile and width when requesting a quotation or placing an order.

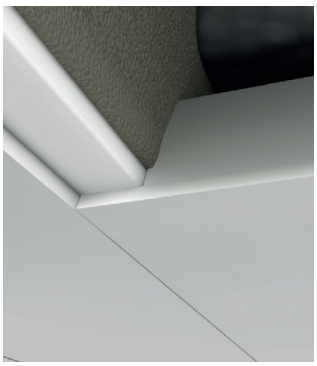

Optimised visible joint
Installation tolerances can be concealed with the well-known stepped rebate between the side part and the closing cover.

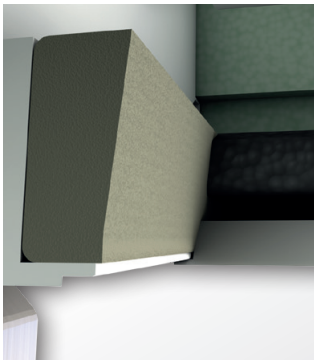

Tighter than ever before
The foam block fastened to the side part enables the optimal insulation of the reveal area.

1 Crossbar insulation
Flexible foam profiles optimise the air-tightness and avoid thermal bridges at the closing cover.

2 Connecting profile
The clipped-on profile provides for clean looks when installing.

3 Closing cover
Available in window white for a harmonious, high-quality look.

Dimensions and insulation values

Plaster (monolithic)

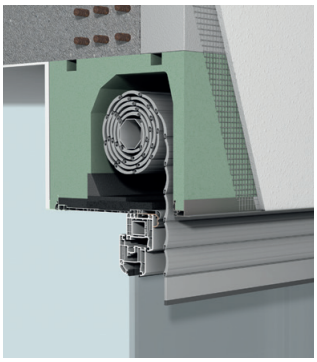

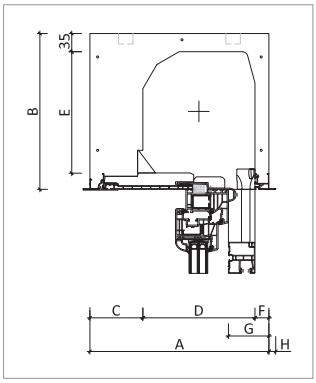

Plaster in ETICS



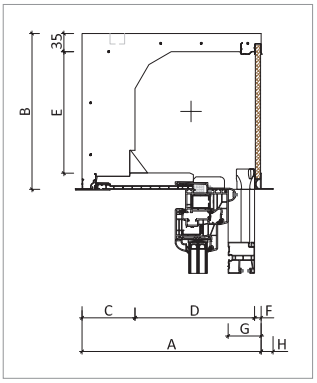

ETICS

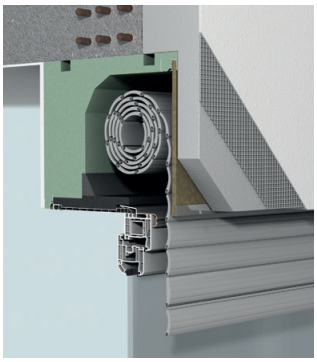

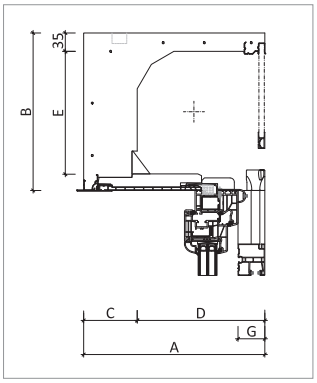

Brick

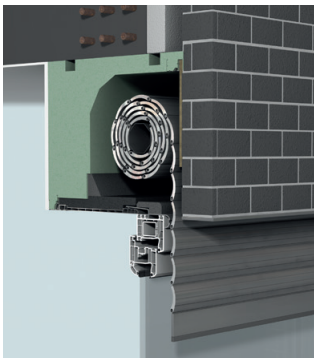

Window and blind – example illustration

THERMAL INSULATION VALUES taking the box width as an example	Plaster (monolithic) 365 mm	fig. 265 [1]	Plaster in ETICS 345 mm	fig. 274 [1]	ETICS 345 mm	fig. 274 [1]	Brick 345 mm	fig. 283 [1]
Ψ (Psi) in [W/(mK)]	-0.12	≤ 0.19	-0.18	≤ 0.12	-0.13	≤ 0.12	-0.13	≤ 0.11
f_{Rsi} [-]	0.71	≥ 0.70	0.72	≥ 0.70	0.70	≥ 0.70	0.71	≥ 0.70
U_{Sb} [W/(m²K)] (EN 10077:2012)	0.63	≤ 0.85	0.66	≤ 0.85	0.76	≤ 0.85	0.81	≤ 0.85
U_{Sb} [W/(m²K)] (EN 10077:2018)	0.65	≤ 0.85	0.69	≤ 0.85	0.73	≤ 0.85	0.79	≤ 0.85

Dimensions

ROKA-TOP® 2		Plaster version [2]							ETICS version [2]							Brick version [2]						
A	Box width	240	250	260	280	300	345	365	240	250	260	280	300	345	365	240	250	260	280	300	345	365
B	Box height	250	250	250	250/300				250	250	250	250/300				250	250	250	250/300			
C	Leg thickness inside	27	37	47	37	57	102	122	27	37	47	37	57	102	122	27	37	47	37	57	102	122
D	Clearance width	186	186	186	216	216	216	216	200	200	200	230	230	230	230	200	200	200	230	230	230	230
E	Clearance height	184	184	184	184/234				184	184	184	184/234				184	184	184	184/234			
	Clearance internal dimension [3]	184	184	184	184/216				184	184	184	184/216				184	184	184	184/216			
F	Leg thickness outside	27	27	27	27	27	27	27	13	13	13	13	13	13	13	0	0	0	0	0	0	0
G	Window seat from external side of box [4]	78	78	78	78	78	78	78	64	64	64	64	64	64	64	51	51	51	51	51	51	51
H	End rail overhang outside	13	13	13	13	13	13	13	23	23	23	23	23	23	23	0	0	0	0	0	0	0
ROKA-TOP® 2		Standard: with reinforcement inlay – box end rail inside 13 mm																				

Dimensions in mm

[1] With the coming into force in Germany of the GEG (Building Energy Act) in November 2020, supplementary sheet 2 to DIN 4108 from 2006 was replaced by the new supplementary sheet 2:2019-06.
Thermal values shown correspond to the latest requirements; reference values for (Psi) and f_{Rsi} are complied with. The system is considered an installation detail "equivalent to supplementary sheet 2".
Note: The top-mounted box was assigned in the calculations of the window area. Air layers according to EN 10077:2012 and EN 10077:2018

[2] With smaller box widths, the feasibility is to be checked depending on the guide rail and window frame width. An adequate inspection opening must be ensured.

[3] Theoretically available roll chamber -press measured- not considering installation clearance.

[4] Dependent on guide rail installation depth; dimensions result from PVC guide rail 60 x 51 mm.

ROKA-TOP® 2 RG

The benchmark for optimal air-tightness

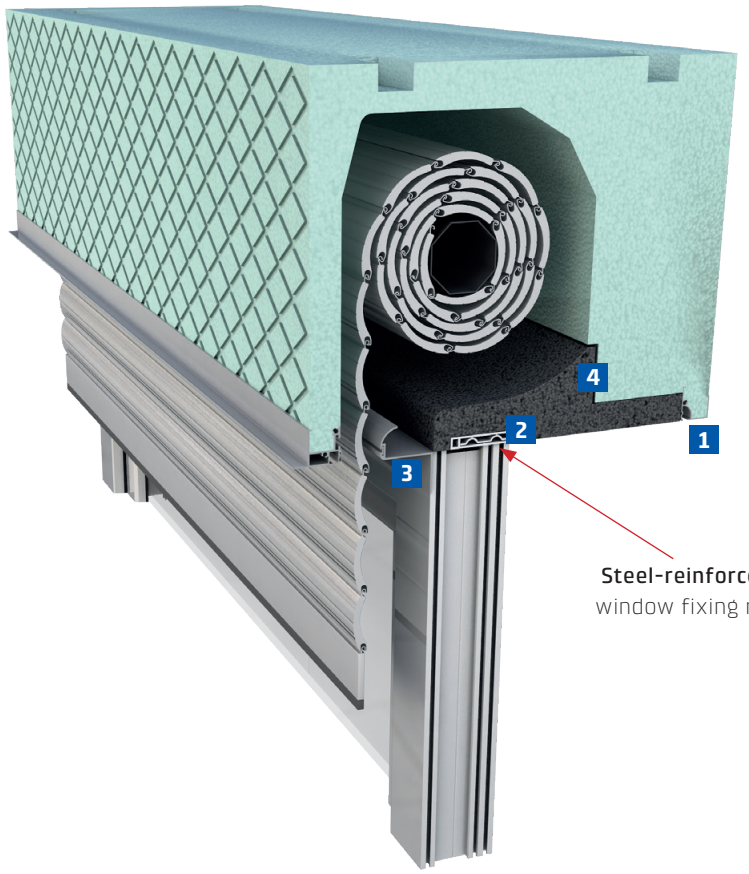



Can be integrated invisibly
Apart from the improved insulation properties, the advantage of systems that are closed on the room side lies in the integration, which is invisible on the room side. Since inspection takes place from the outside, the box can be fully plastered over on the inside.

OPTIMISED PROPERTIES WITH TOP VALUES

ROKA-TOP® 2 RG is the variant in the optimised top-mounted box collection that is closed on the room side. Since this system is inspected from the outside, it can be completely plastered over on the room side and thus integrated invisibly.
In addition, the version closed on the room side (RG) is absolutely airtight, as there are no joints to the inside. A further special feature is the ALU RG-TG guide rail system included in the scope of delivery. This is thermally isolated and ensures a driving rain-proof connection between guide rail and window.

In addition, many details are included as standard that make the ROKA-TOP® 2 RG a comfortable shading system. Examples of this are the stable box end rail, the window fixing profile in the insulating wedge and the variable inspection openings. These measure optionally 80 or 100 millimetres and enable both easy inspection of the box and the retrofitting of an insect screen.

Note:
Please state the window profile and width when requesting a quotation or placing an order.

1 Close-jointed design
The insulating wedge is firmly glued to the box body. This ensures absolute air-tightness.

2 Window-fixing profile
The special PVC stiffening profile is integrated as standard in the insulating wedges of the roller shutter boxes closed on the room side (RG) and is provided with a steel inlay. It serves to fix the window frame.

3 Inspection opening
Two inspection sizes, 80 mm and 100 mm, offer enormous scope for window positioning and ensure easy inspection.

4 Insulating wedge
For even better insulation values, the insulating wedge is manufactured as standard from the high-performance insulating material Neopor®.

Dimensions and insulation values

Plaster (monolithic)



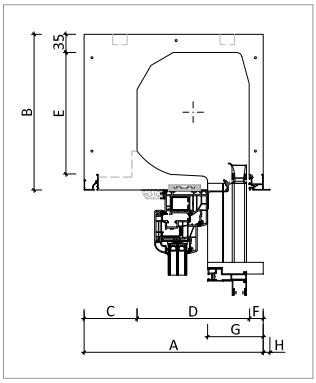

Plaster in ETICS

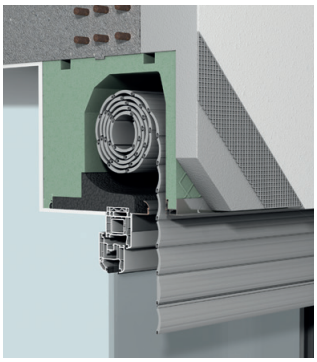

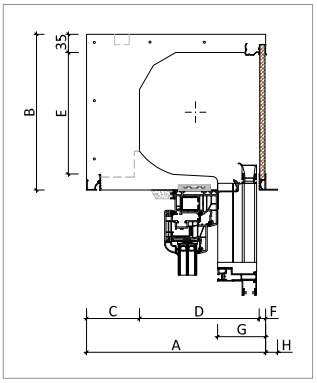

ETICS



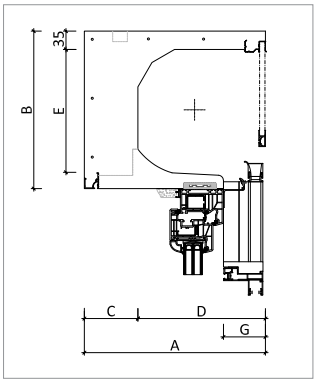

Brick

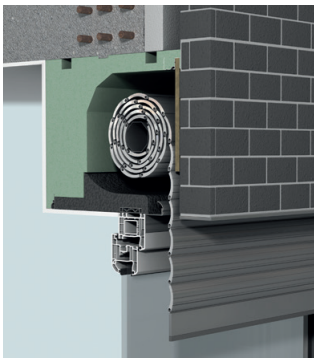

Window and blind – example illustration

THERMAL INSULATION VALUES taking the box width as an example	Plaster (monolithic) 365 mm	fig. 265[1)]	Plaster in ETICS 345 mm	fig. 274[1)]	ETICS 345 mm	fig. 274[1)]	Brick 345 mm	fig. 283[1)]
Ψ (Psi) in [W/(mK)]	-0.18	≤ 0.19	-0.20	≤ 0.12	-0.19	≤ 0.12	-0.18	≤ 0.11
f_{Rsi} [-]	0.77	≥ 0.70	0.77	≥ 0.70	0.76	≥ 0.70	0.75	≥ 0.70
U_{Sb} [W/(m²K)] (EN 10077:2012)	0.49	≤ 0.85	0.51	≤ 0.85	0.57	≤ 0.85	0.61	≤ 0.85
U_{Sb} [W/(m²K)] (EN 10077:2018)	0.48	≤ 0.85	0.51	≤ 0.85	0.54	≤ 0.85	0.58	≤ 0.85

Dimensions

ROKA-TOP® 2 RG		Plaster version							ETICS version							Brick version						
A	Box width	240	250	260	280	300	345	365	240	250	260	280	300	345	365	240	250	260	280	300	345	365
B	Box height	250	250	250	250/300				250	250	250	250/300				250	250	250	250/300			
C	Leg thickness inside	27	37	47	37	57	102	122	27	37	47	37	57	102	122	27	37	47	37	57	102	122
D	Clearance width	186	186	186	216	216	216	216	200	200	200	230	230	230	230	200	200	200	230	230	230	230
E	Clearance height	186	186	186	186/236				186	186	186	186/236				186	186	186	186/236			
	Clearance internal dimension[2)]	186	186	186	186/216				186	186	186	186/216				186	186	186	186/216			
F	Leg thickness outside	27	27	27	27	27	27	27	13	13	13	13	13	13	13	0	0	0	0	0	0	0
G	Window seat from external side of box[3)]	107/127							93/113							80/100						
H	End rail overhang outside	13	13	13	13	13	13	13	23	23	23	23	23	23	23	0	0	0	0	0	0	0
ROKA-TOP® 2 RG		Standard: with reinforcement inlay – box end rail inside 0 mm																				

Dimensions in mm

[1)] With the coming into force in Germany of the GEG (Building Energy Act) in November 2020, supplementary sheet 2 to DIN 4108 from 2006 was replaced by the new supplementary sheet 2:2019-06.
Thermal values shown correspond to the latest requirements; reference values for (Psi) and f_{Rsi} are complied with. The system is considered an installation detail "equivalent to supplementary sheet 2".
Note: The top-mounted box was assigned in the calculations of the window area. Air layers according to EN 10077:2012 and EN 10077:2018

[2)] Theoretically available roll chamber -press measured- not considering installation clearance.

[3)] Dependent on the inspection opening, for which there is a choice of 80 mm or 100 mm.

TECHNICAL DATA
ROKA-Top® 2

Up-to-date technical data sheets are available in the technical portal at www.beck-heun.de

Screw-on strap winder

The entry-level and standard version for the operation of the ROKA-TOP® 2 element. The shutter is driven by a 14 mm-wide strap; the strap winder is screwed on-site to the window frame. From an element size of approx. 2.5 m², a strap-pull gearbox (at extra cost) is automatically installed so as not to exceed the permissible tensile forces (class 1 according to EN 13659:2015-07) and to increase operating comfort (possible up to an element size of approx. 4.0 m²).
Note: With smaller boxes (240-260 mm) the strap guidance position of 25 mm leads to slightly angled running of the strap with respect to the window frame.

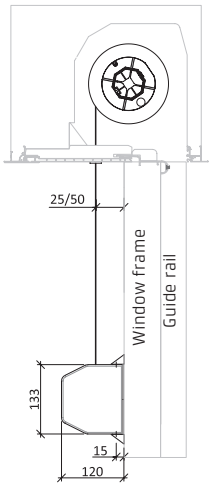

Fig. shows ROKA-TOP® 2

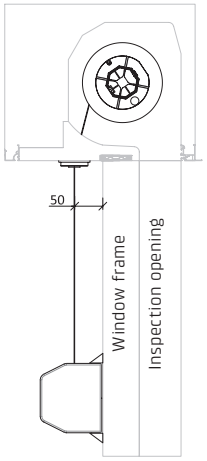

Fig. shows ROKA-TOP® 2 RG

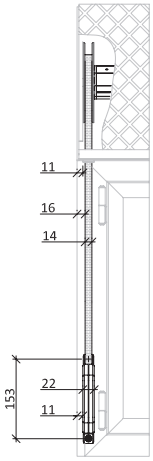

Fig. shows view from the inside

Window frame size

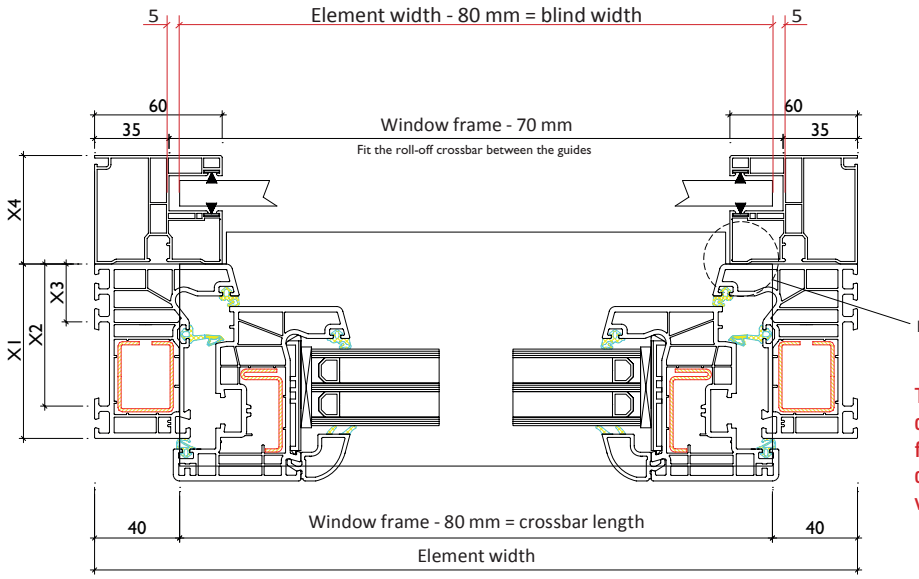

The dimension between the outer edge of the window frame and the groove bottom of the guide rail (standard version) must be 35 mm!

PVC guide rail for closing cover boxes

Guide rail
PVC 60 x 51 mm G2

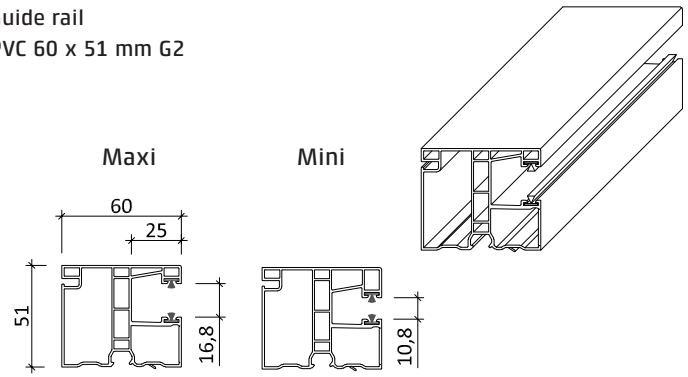

Installation situations - PVC guide rail for closing cover boxes

Guide rail
PVC 60 x 51 mm G2

Mini or Maxi guide rail available

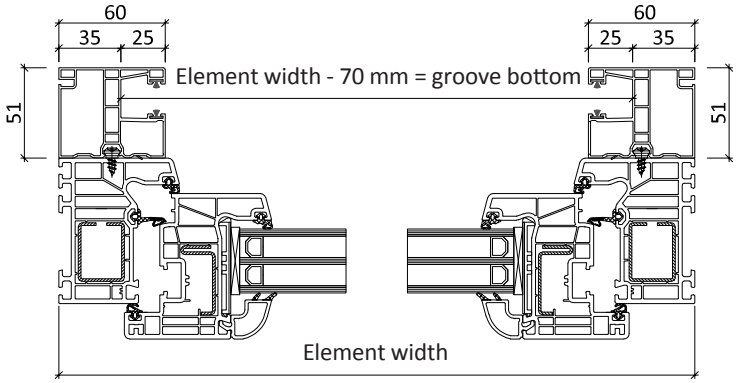

Roll-off crossbars

Roll-off crossbar PVC 85
max. window frame thickness 70 mm

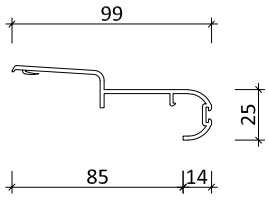

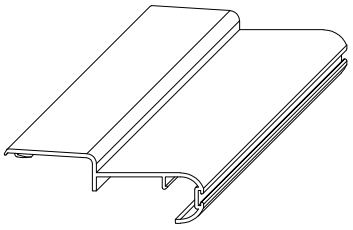

The roll-off crossbar PVC 85 is optionally available in white or colour

TECHNICAL DATA

ALU RG-TG guide rails for boxes closed on the room side

ALU RG-TG guide rail 75 / 95 mm

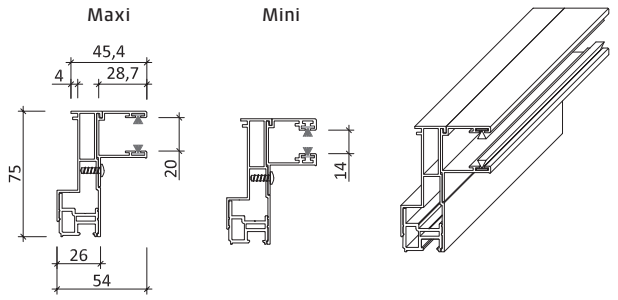

Figure shows 75 mm guide rail

ALU RG-TG double guide rail 75 / 95 mm

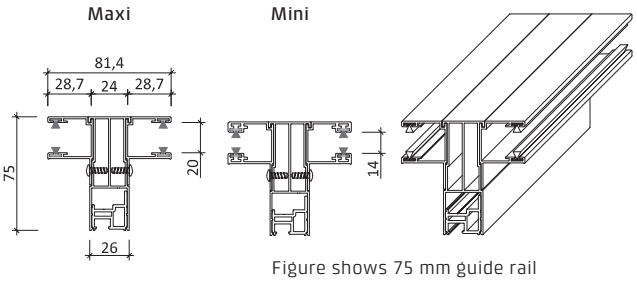

Figure shows 75 mm guide rail

Aluminium intermediate cover

to fit ALU RG-TG

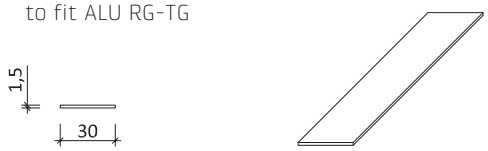

Other widths possible on request

ALUMINIUM roll-off profile 40 mm

to fit ALU RG-TG 75 mm

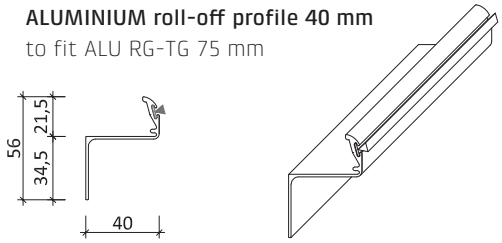

ALUMINIUM roll-off profile 60 mm

to fit ALU RG-TG 95 mm

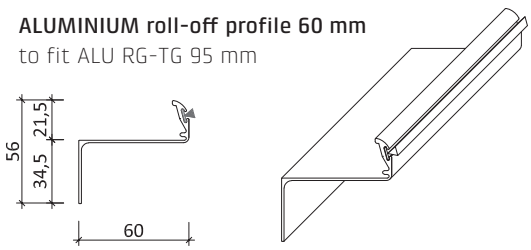

ALU RG-TG

guide rail installation



The basis of the guide rail installation is the KS nipple rail, which is provided with a self-adhesive sealing strip. Prior to the final installation, a piece of protective film is detached so that it is easier to peel off later.



Mark the seating of the nipple rail or alternatively the position of the self-drilling screw. If installing without self-drilling screw, the nipple rail is adhered along the marking. The rail can be installed with and without self-drilling screw.

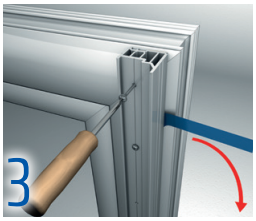

If installing with self-drilling screw, the rail is simply snapped on. In both cases, remove the protective film and adjust the height of the rail at the start of the installation.

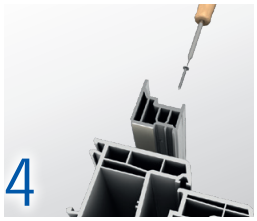

After adhering or snapping on the nipple rail, it is firmly screwed to the window profile.

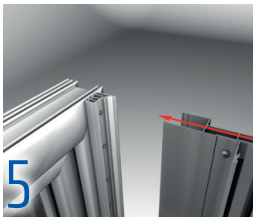

The complete guide rail package can now be snapped onto the nipple rail.

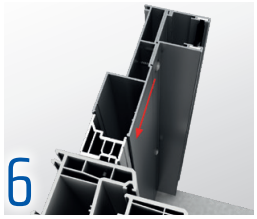

Adjust the height of the guide rail. Fix it with a screw if necessary.

Installation situations - ALU RG-TG guide rails for boxes closed on the room side

Guide rail
ALU RG-TG 75/95 mm

Mini or Maxi guide rail available

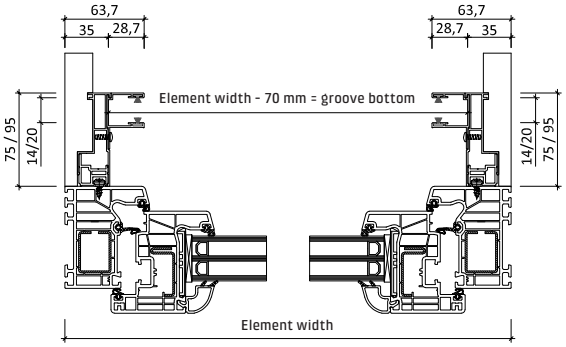

Division combination with double guide rail ALU RG-TG 75/95 mm

Mini or Maxi guide rail available

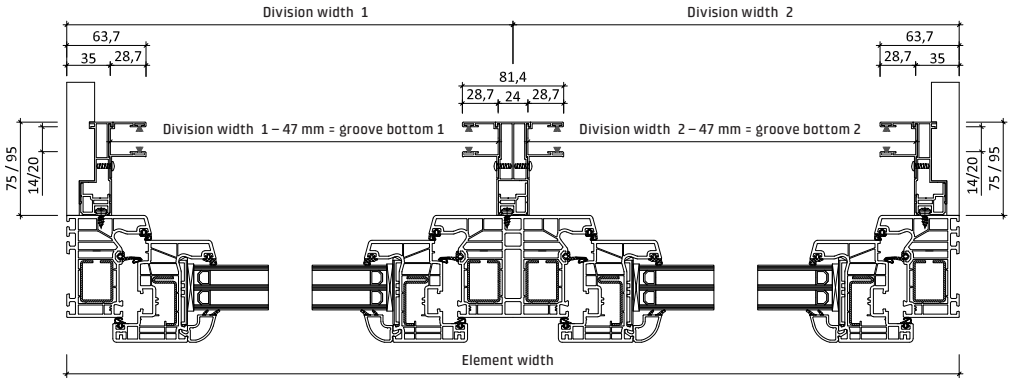

Division combination with guide rail ALU RG-TG 75/95 mm with intermediate cover 30 mm

Mini or Maxi guide rail available

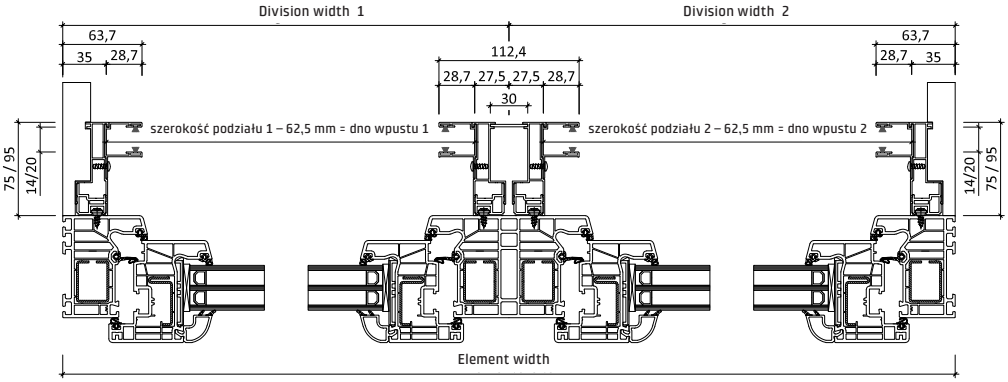

Base rail insulation – delivery variants

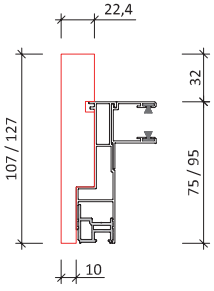

Red = insulation

Standard version for plaster:
The variant with overhanging base rail insulation is the standard for delivery with plaster box. If a plaster box is used in ETICS, we recommended the variant on the right with 0 mm overhang.

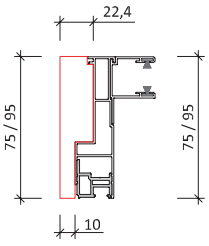

Red = insulation

Standard version for brick/ETICS:
The variant without insulation overhang is standard with ROKA-TOP® 2 brick and ETICS boxes. This variant can optionally be ordered if it is also required with plaster boxes.

TECHNICAL DATA

ROKA-TOP® 2 corner solutions

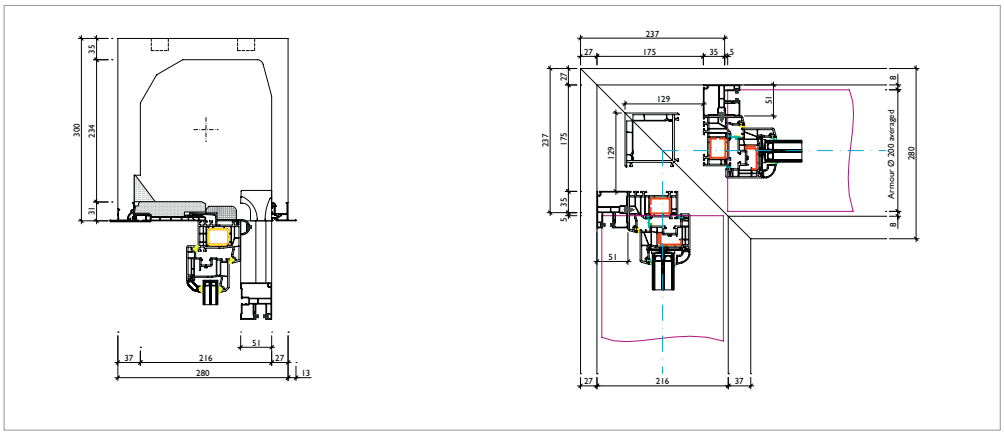

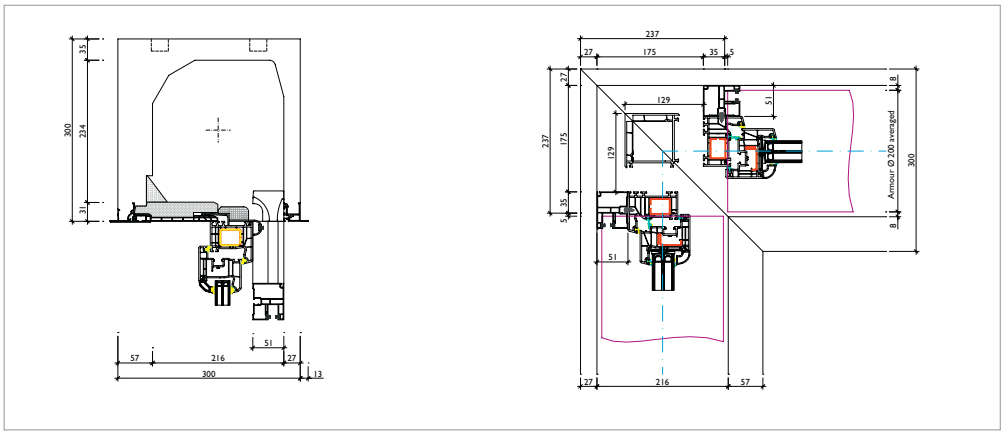

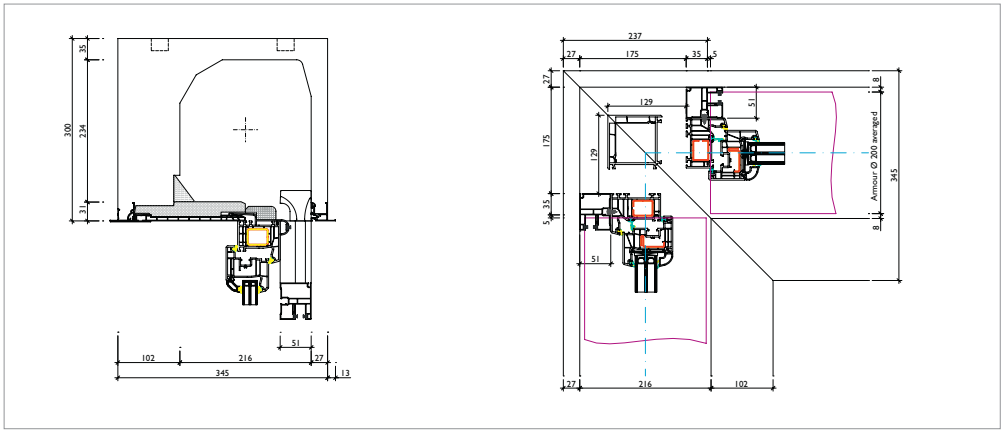

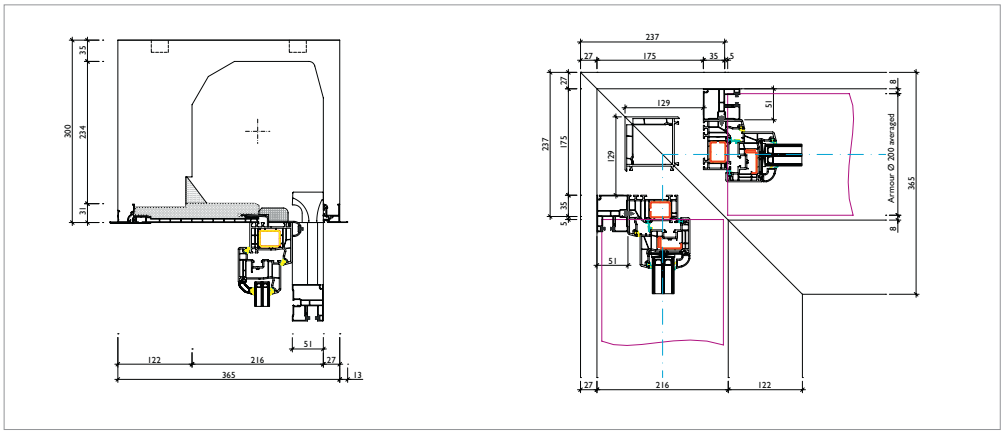

Illustration on the basis of specified roller shutter diameter. It must be ensured that there is sufficient space in the corner area of the roller shutters. Construction illustrations apply subject to technical changes.

Up-to-date technical data sheets are available in the technical portal at www.beck-heun.de

ROKA-TOP® 2 RG corner solutions

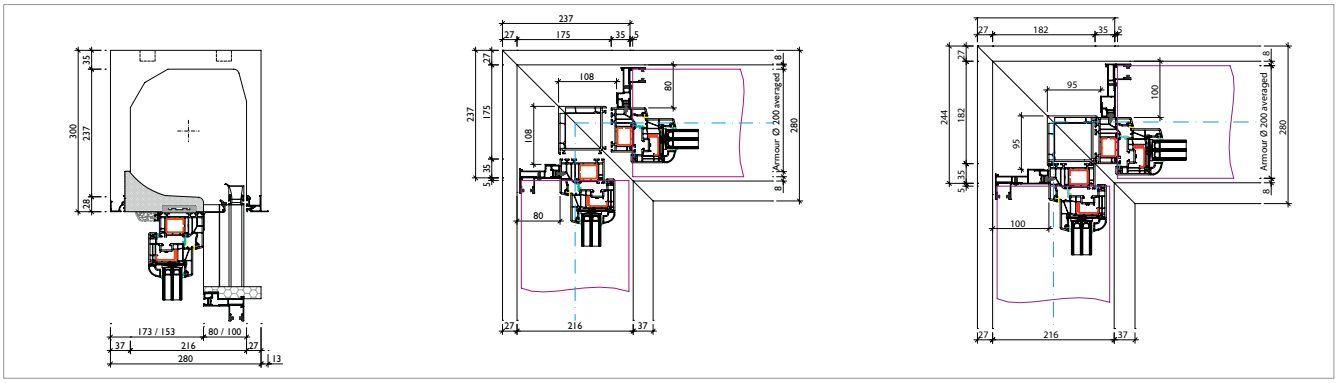

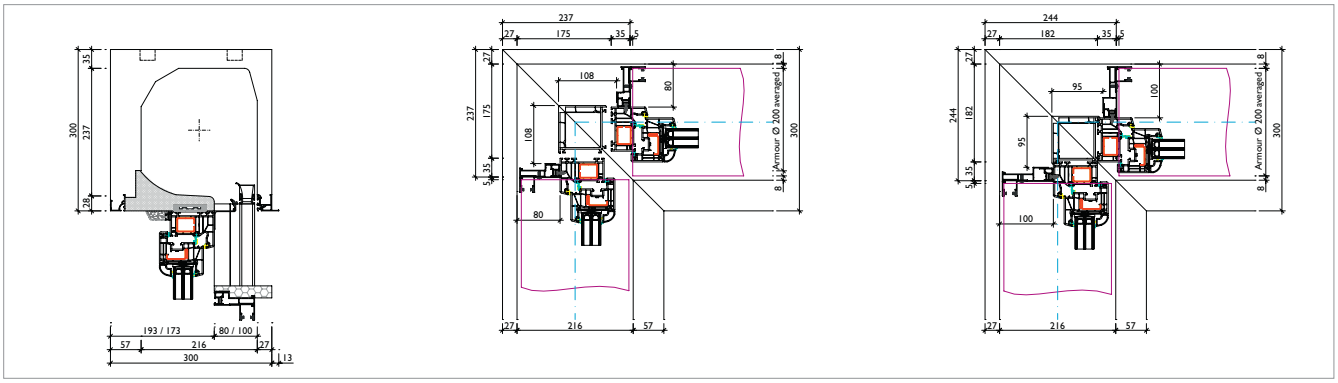

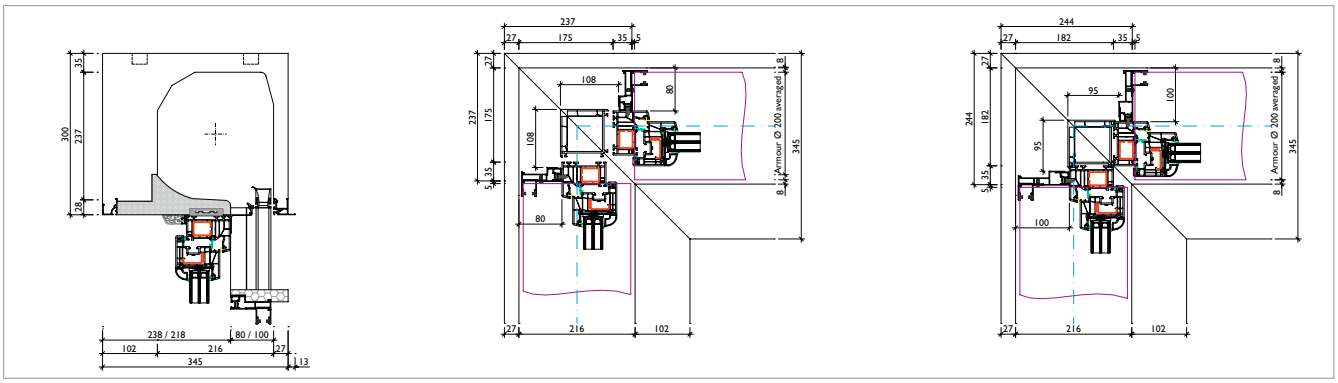

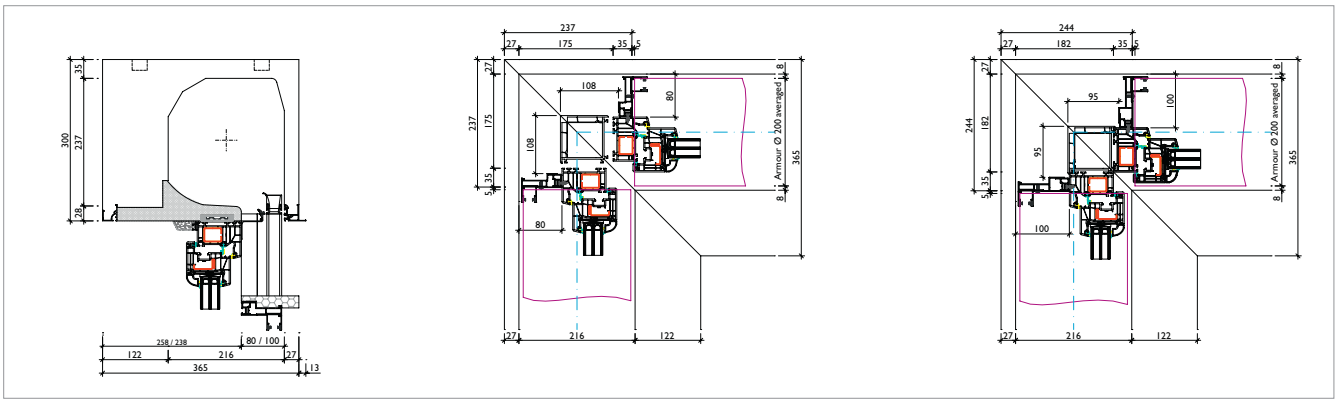

Illustration on the basis of specified roller shutter diameter. It must be ensured that there is sufficient space in the corner area of the roller shutters. Construction illustrations apply subject to technical changes.

ROKA-TOP® 2 RG installation situations

ROKA-TOP® 2 RG
for monolithic masonry

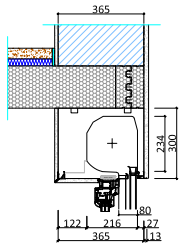

Masonry:	**365 mm** [1]
Box width:	**365 mm**
Box height:	300 mm
Clearance width:	216 mm
Clearance height:	230 mm

ROKA-TOP® 2 RG
for ETICS masonry and 175 mm rear masonry

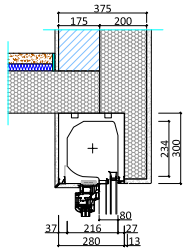

Masonry:	**175 mm**
Insulation:	200 mm
Wall thickness:	375 mm [1]
Box width:	**280 mm**
Box height:	300 mm
Clearance width:	216 mm
Clearance height:	230 mm

ROKA-TOP® 2 RG
for ETICS masonry and 200 mm rear masonry

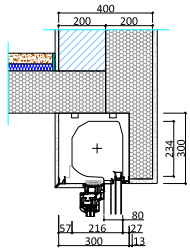

Masonry:	**200 mm**
Insulation:	200 mm
Wall thickness:	400 mm [1]
Box width:	**300 mm**
Box height:	300 mm
Clearance width:	216 mm
Clearance height:	230 mm

ROKA-TOP® 2 RG
for ETICS masonry and 240 mm rear masonry

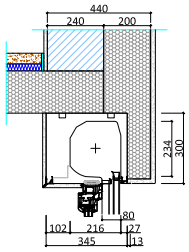

Masonry:	**240 mm**
Insulation:	200 mm
Wall thickness:	440 mm [1]
Box width:	**345 mm**
Box height:	300 mm
Clearance width:	216 mm
Clearance height:	230 mm

ROKA-TOP® 2 RG ETICS
for ETICS masonry and 175 mm rear masonry

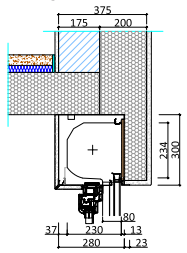

Masonry:	**175 mm**
Insulation:	200 mm
Wall thickness:	375 mm [1]
Box width:	**280 mm**
Box height:	300 mm
Clearance width:	233 mm
Clearance height:	230 mm

ROKA-TOP® 2 RG ETICS
for ETICS masonry and 200 mm rear masonry

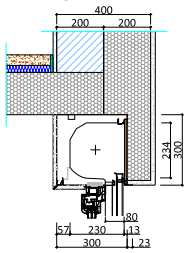

Masonry:	**200 mm**
Insulation:	200 mm
Wall thickness:	400 mm [1]
Box width:	**300 mm**
Box height:	300 mm
Clearance width:	233 mm
Clearance height:	230 mm

ROKA-TOP® 2 RG ETICS
for ETICS masonry and 240 mm rear masonry

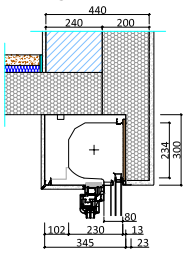

Masonry:	**240 mm**
Insulation:	200 mm
Wall thickness:	440 mm [1]
Box width:	**345 mm**
Box height:	300 mm
Clearance width:	233 mm
Clearance height:	230 mm

ROKA-TOP® 2 RG Brick
for brick masonry and 150 mm rear masonry

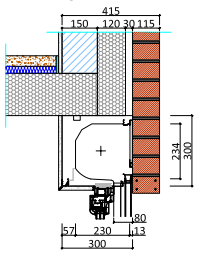

Masonry:	**150 mm**
Insulation:	120 mm
Air layer:	30 mm
Brick masonry:	115 mm
Wall thickness:	415 mm [1]
Box width:	**300 mm**
Box height:	300 mm
Clearance width:	233 mm
Clearance height:	230 mm

ROKA-TOP® 2 RG Brick
for brick masonry and 175 mm rear masonry

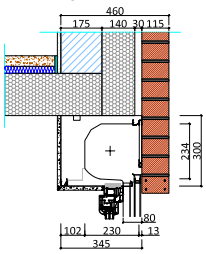

Masonry:	**175 mm**
Insulation:	140 mm
Air layer:	30 mm
Brick masonry:	115 mm
Wall thickness:	460 mm [1]
Box width:	**345 mm**
Box height:	300 mm
Clearance width:	233 mm
Clearance height:	230 mm

ROKA-TOP® 2 RG Brick
for brick masonry and 200 mm rear masonry

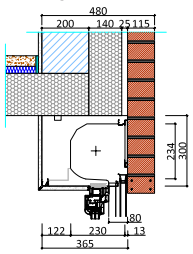

Masonry:	**200 mm**
Insulation:	140 mm
Air layer:	25 mm
Brick masonry:	115 mm
Wall thickness:	480 mm [1]
Box width:	**365 mm**
Box height:	300 mm
Clearance width:	233 mm
Clearance height:	230 mm

Construction illustrations apply subject to technical changes.
[1] Dimension specification not considering interior and exterior plaster



The new solution for increased noise protection

RESIDOR®

On account of its special material structure, the new fibre composite material RESIDOR® provides for highly efficient sound absorption and enables top noise insulation values **(Rw up to 47 dB*).**

In addition, it makes excellent machining possible, such as drilling, sawing or milling. Due to its low thickness, the material can be formed optimally and is thus flexibly usable. Not only that, it is up to 100% recyclable.

*Example value with ROKA-TOP® 2 RG 300/300 with RESIDOR®

- **Highly efficient sound absorption**
- **Low material thickness**
- **Flexibly usable**
- **Dust-free machining**
- **Formable and dimensionally stable**
- **Low weight**
- **Up to 100 % recyclable**

Beck+Heun
BESTE WERTE FÜRS HAUS

ROKA-TOP® 2 SHADOW VENETIAN BLIND TOP-MOUNTED BOX

Flexibility and individuality come first with the venetian blind top-mounted boxes from Beck+Heun. You can obtain a suitable system for every size requirement and every masonry construction here. The tasteful product series is rounded off by various slat widths and shapes as well as an enormous choice of colours.



ROKA-TOP® 2 SHADOW

Ideal light management for all needs

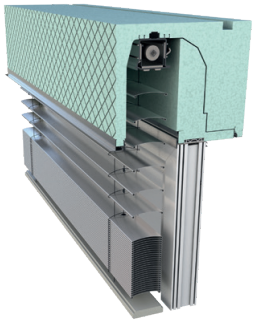

ROKA-TOP® 2 SHADOW

- Shading height up to 3000 mm with a box height of just 300 mm
- Box height same on inside/outside (lintel appearance similar to ROKA-TOP® 2)
- 265 mm shaft height (with a box height of 300 mm) and 215 mm shaft height (with a box height of 250 mm) – unchangeable –
- Window stop rail to conceal the building connection joint

INTEGRATED MOUNTING RAIL

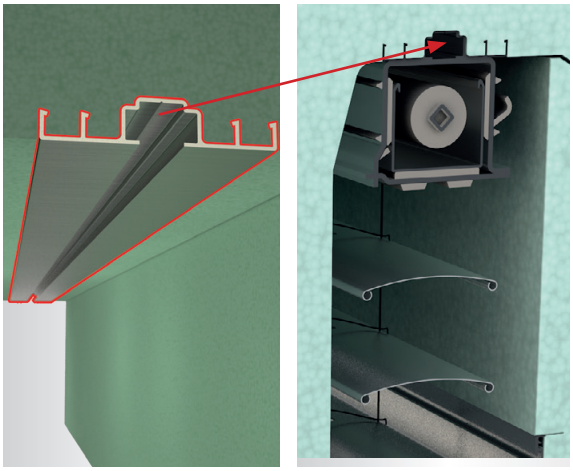

Quick and simple to install

The integrated mounting rail enables the quick and simple fastening of the venetian blind carrier. Sources of error are minimised, as the laborious marking of the fastening points is eliminated.

STABILUM FASTENING CONCEPTS

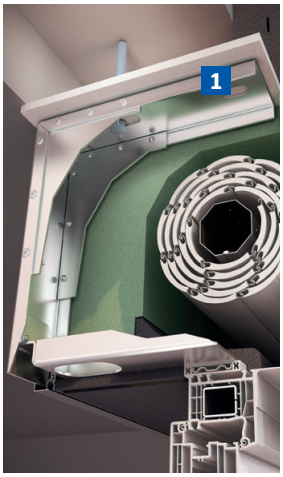

The STABILUM fastening concepts offer various ways to absorb wind loads from the window and dissipate them into the construction. The products are technically tested and ensure that, under defined boundary conditions, no impairment of function, permanent deformations or damage to the window occurs.

Absorbance of wind and impact loads

1 Galvanised steel, 4 mm

ROKA-TOP® 2 SHADOW

The new bestseller

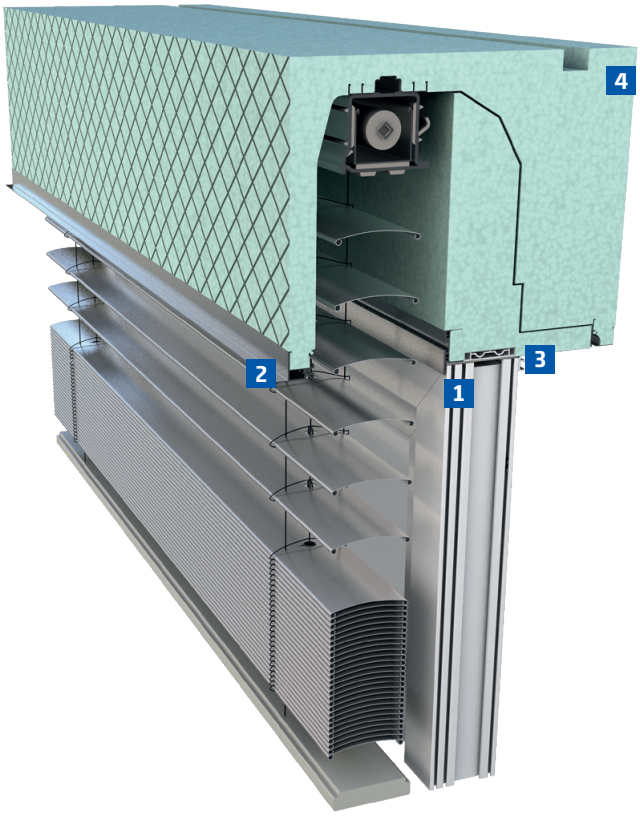

FOR EVEN MORE COMFORT AND SAFETY

The proven venetian blind box system has been further improved and strengthened in detail. The standard reinforcement inlay, the box end rail and the fixing strip integrated in the insulating wedge promise even greater stability and support. Special attention is also paid to the visually revised outer panel, which has the same height both inside and out and thus ensures a uniform lintel appearance. The venetian blind box system is thus ideal for combined use with a roller shutter box.

Note:
Please state the window profile and width when requesting a quotation or placing an order.

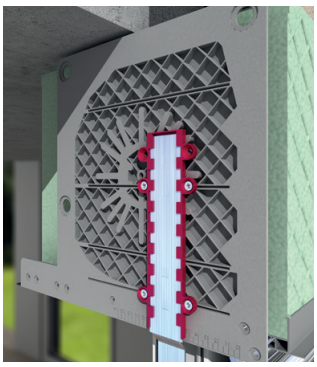

Side part
A clean look as well as high stability are enabled by the injection-moulded PVC side part.

1 Window stop rail
Provides additional stabilisation for the window frame. In addition, it conceals the mounting joint between the window and the insulating wedge.

2 Refined details
The outer integrated box end rail has been designed to be even more stable. The moulded honeycomb structure provides for optimal plaster adhesion to the box.

3 Window-fixing profile
The special PVC stiffening profile is integrated as standard in the venetian blind box and is provided with a steel inlay. It serves to fix the window frame.

4 Reinforcement inlay
High stability is the recognition feature of our venetian blind boxes. Profiled PLATINUM® reinforcing inlays provide for high rigidity.

Dimensions and insulation values

Plaster (monolithic)

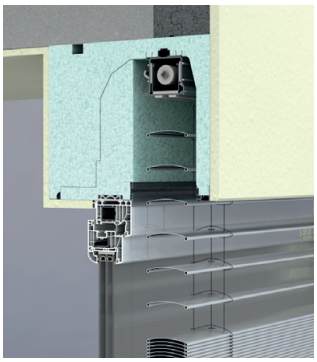

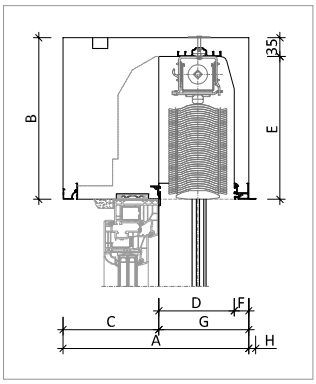

Plaster in ETICS

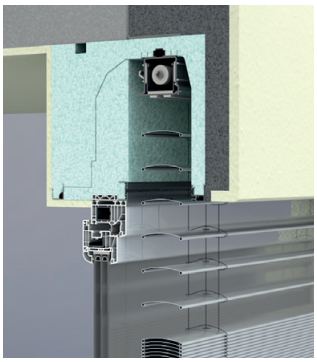

ETICS

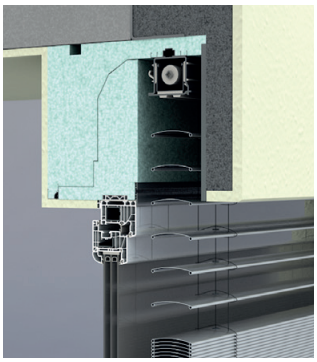

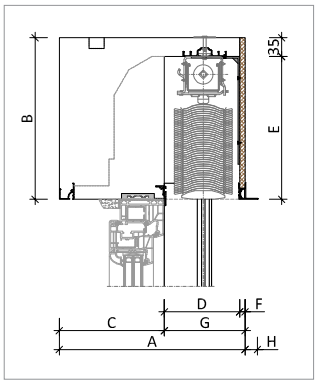

Brick

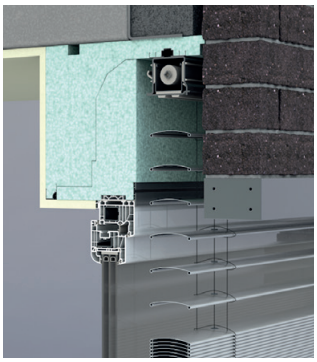

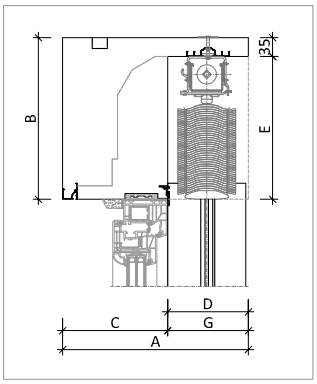

Window and blind – example illustration

THERMAL INSULATION VALUES taking the box width as an example	Plaster (monolithic) 365 mm	fig. 265 [1]	Plaster in ETICS 345 mm	fig. 274 [1]	ETICS 345 mm	fig. 274 [1]	Brick 345 mm	fig. 283 [1]
Ψ (Psi) in [W/(mK)]	-0.25	≤ 0.19	-0.23	≤ 0.12	-0.25	≤ 0.12	-0.28	≤ 0.11
f_{Rsi} [-]	0.81	≥ 0.70	0.82	≥ 0.70	0.83	≥ 0.70	0.81	≥ 0.70
U_{sb} [W/(m²K)]	0.28	≤ 0.85	0.29	≤ 0.85	0.28	≤ 0.85	0.28	≤ 0.85

Dimensions

ROKA-TOP® 2 SHADOW		Plaster version				ETICS version				Brick version			
A	Box width [2]	280	300	345	365	280	300	345	365	280	300	345	365
B	Box height [2]	300	250/300	300	250/300	300	300	300	300	300	300	300	300
C	Leg thickness inside	113	133	178	198	130	150	195	215	130	150	195	215
D	Shaft depth	140	140	140	140	140	140	140	140	150	150	150	150
E	Shaft height	265	215/265	265	215/265	265	265	265	265	265	265	265	265
F	Outer leg thickness	27	27	27	27	10	10	10	10				
G	Window seat from external side of box	167	167	167	167	150	150	150	150	150	150	150	150
H	End rail overhang outside	13	13	13	13	23	23	23	23				

Dimensions in mm

[1] With the coming into force in Germany of the GEG (Building Energy Act) in November 2020, supplementary sheet 2 to DIN 4108 from 2006 was replaced by the new supplementary sheet 2:2019-06.
Thermal values shown correspond to the latest requirements; reference values for (Psi) and f_{Rsi} are complied with. The system is considered an installation detail "equivalent to supplementary sheet 2".
Note: The top-mounted box was assigned in the calculations of the window area. Air layers according to EN 10077:2012 and EN 10077:2018

[2] Deviating box sizes possible

TECHNICAL DATA

Dimension determination & base rail

Dimension determinations – element width

Standard situation

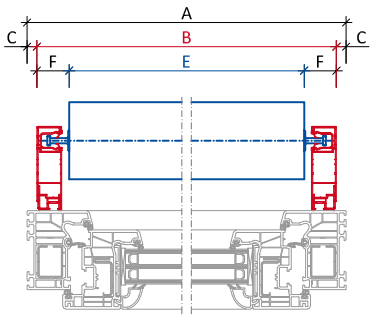

Dimension determination for version with window frame widening / insulation on both sides

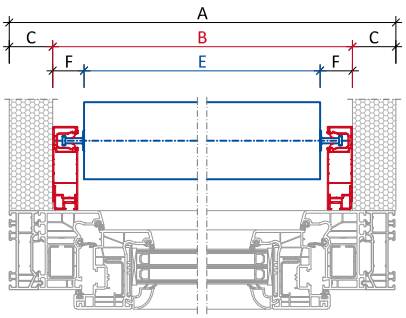

Dimension determination – element width for wood/aluminium windows

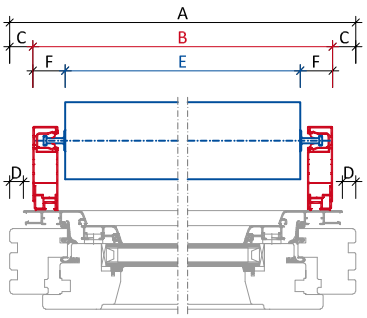

Description of dimension specifications	Standard situation	Version with window frame widening/ insulation on both sides	Version for wood/ aluminium windows
A Window frame width = ordering width	700 [1]	variable	variable
B Outer edge of base rail to outer edge of base rail	680 [1]	680 [1]	680 [1]
C Base rail indentation dimension	10	variable	variable
D Outer edge of window to outer edge of aluminium cover			variable
E Slat length = check dimension [2]	613 [1]	613 [1]	613 [1]
F Outer edge of base rail to outer edge of slat	33.5	33.5	33.5

Dimensions in mm

Lateral plaster connection of base rail

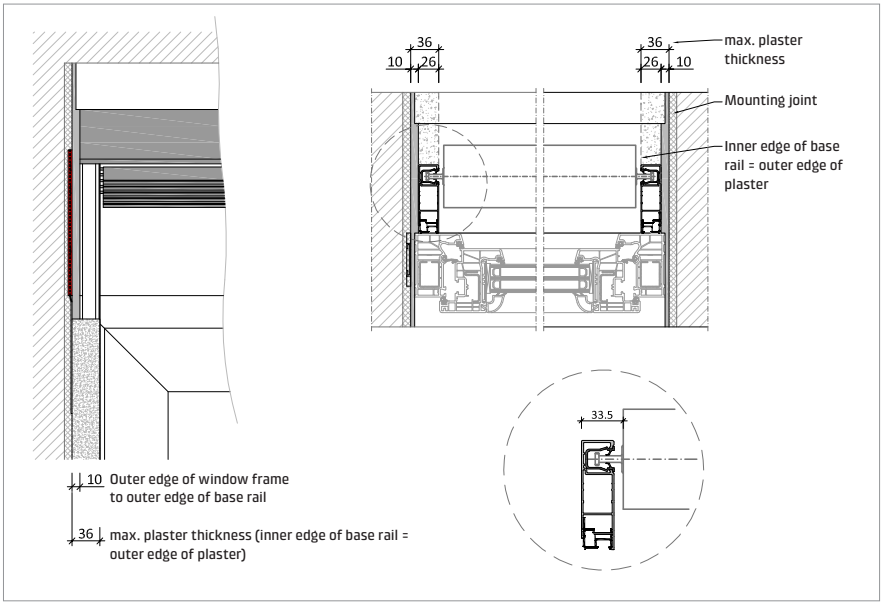

Shaft filler with base rail indentation

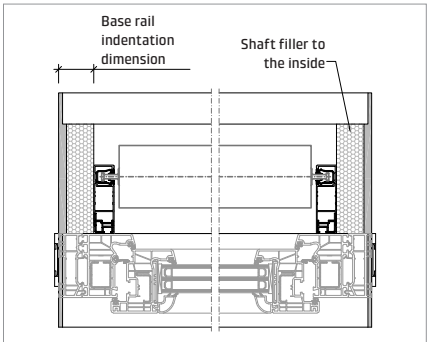

[1] Minimum dimensions
[2] You will also find this dimension on your subsequent delivery.
The specified dimensions are examples and are calculated from the minimum slat length of 613 mm.

Dimension determinations – element height

For dimming venetian blinds only

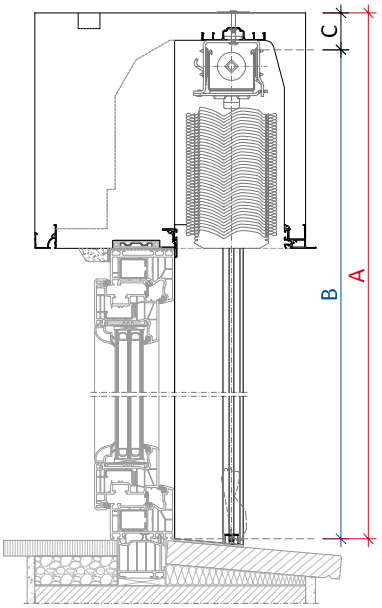

Illustration shows ROKA-TOP® 2

Detail of lower rail – turning behaviour



Lower rail position for F- and C-slats



Lower rail position for dimming slats

When using F- and C-slats, a larger light slit may be caused depending on the height of the flange profile or the version of the window sill. When using dimming slats, the lower rail cannot dim.

Description of dimension specifications	ROKA-TOP® 2 (EX) SHADOW	
	Flat slats / edge-flanged slats	Dimming slats
A Element height = ordering height	Top edge of box to bottom edge of rail	
B Venetian blind height = check dimension [1)]	Element height minus 67	Element height minus 47
C Top edge of box to top edge of head rail	47	47
D Bottom edge of base rail to bottom edge of lower rail of venetian blind	20	

Dimensions in mm

[1)] You will also find this dimension on your subsequent delivery.

TECHNICAL DATA

Angle combinations

Up-to-date technical data sheets are available in the technical portal at www.beck-heun.de

Venetian blind angle combination with filler block

90° outside corner with mitre, filler block and rail guide

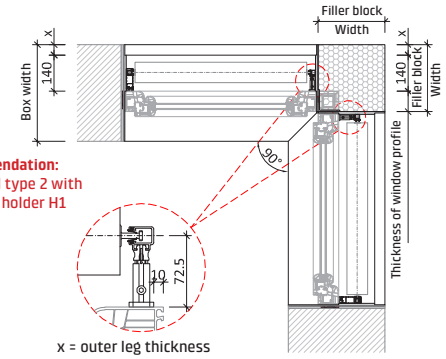

Recommendation:
single rail type 2 with guide rail holder H1

x = outer leg thickness

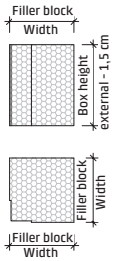

Outer leg thickness x
+ shaft width
+ thickness of window profile

= width of filler block

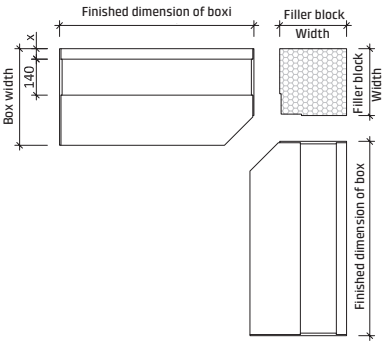

90° outside corner with mitre and rail guide

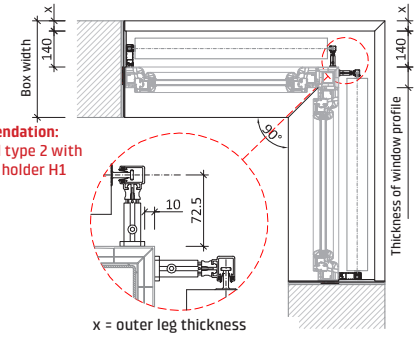

Recommendation:
single rail type 2 with guide rail holder H1

x = outer leg thickness

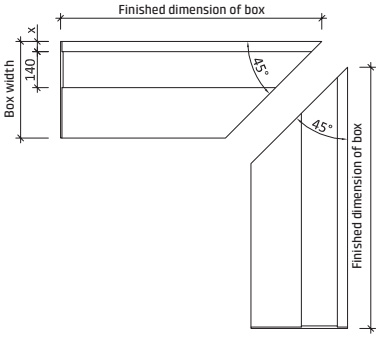

90° outside corner with mitre, filler block and cord guide

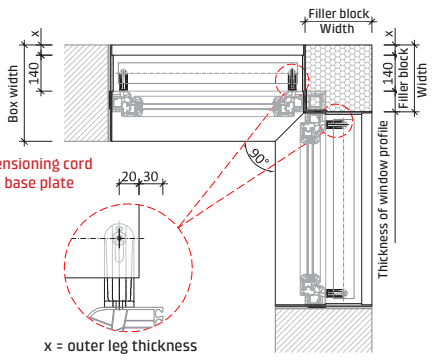

Standard tensioning cord holder with base plate

x = outer leg thickness

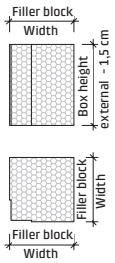

Outer leg thickness x
+ shaft width
+ thickness of window profile

= width of filler block

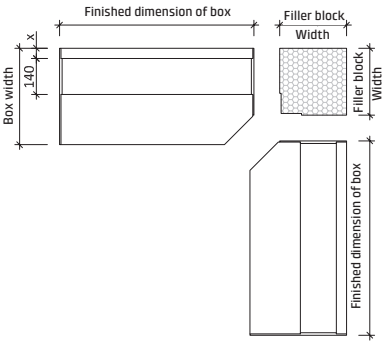

90° outside corner with mitre and cord guide

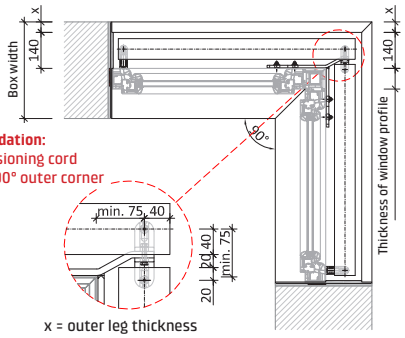

Recommendation:
special tensioning cord holder for 90° outer corner

Shown with 80 mm slats

x = outer leg thickness

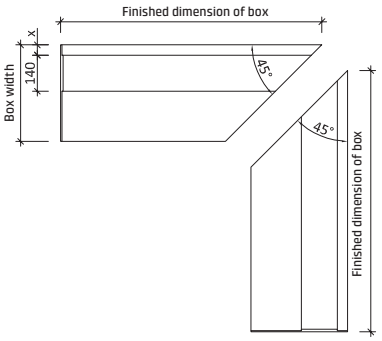

Corner connector

90° outside corner with mitre and corner connector

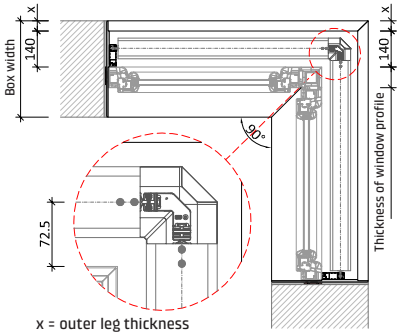

90° inside corner with mitre and corner connector

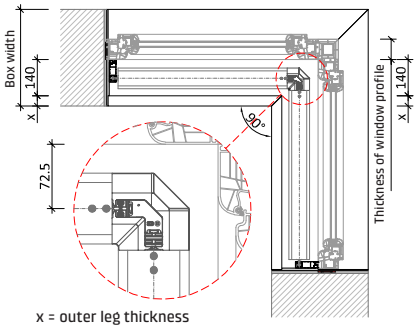

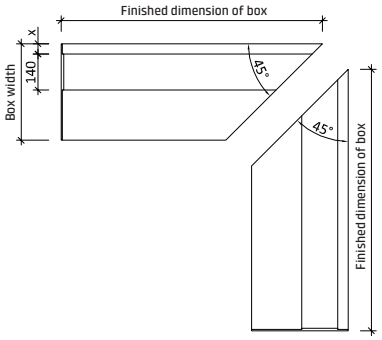

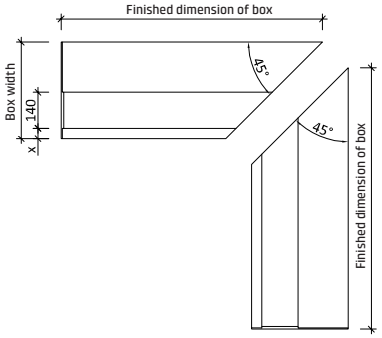

TECHNICAL DATA
Divisions

Division with rail guide

Division of venetian blind with 2 base rails and joint cover

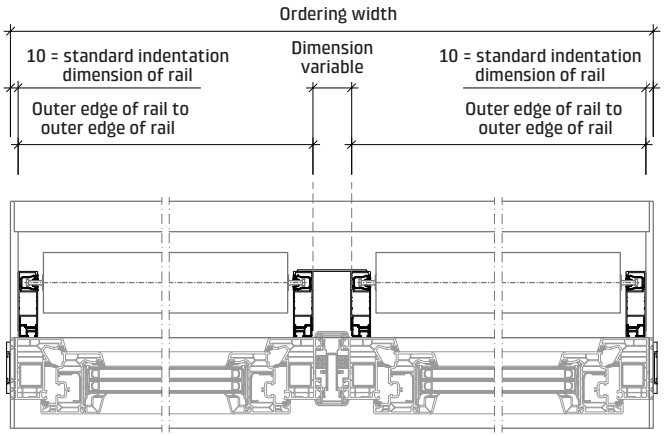

Fastening of the joint cover on site

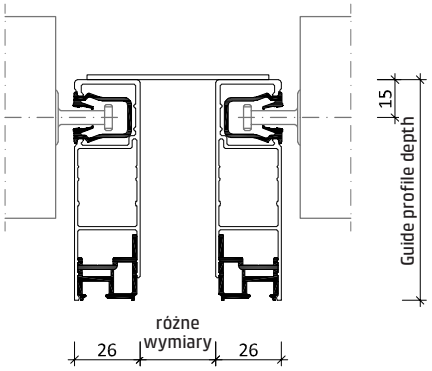

Division of venetian blind with double guide rail with spacer

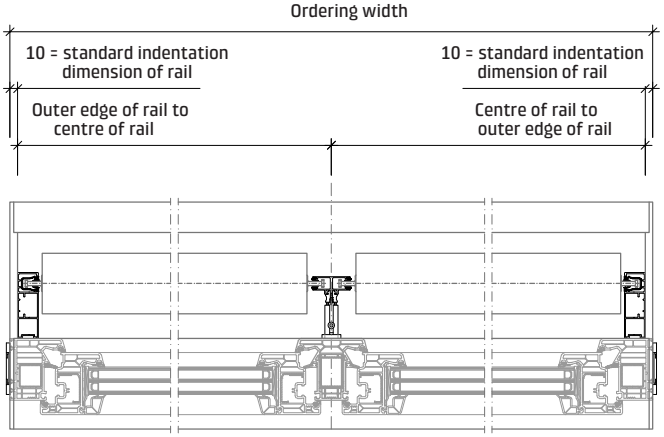

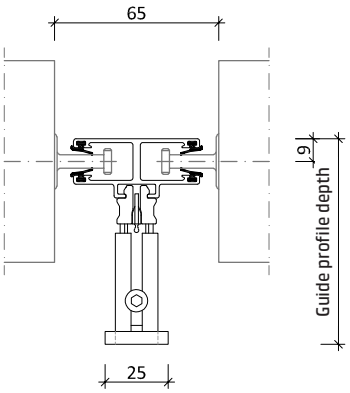

Division with cord guide

Division of venetian blind with 2 standard tensioning cord holders

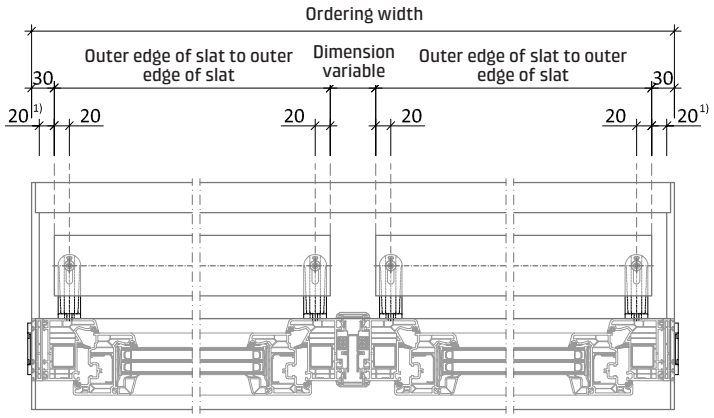

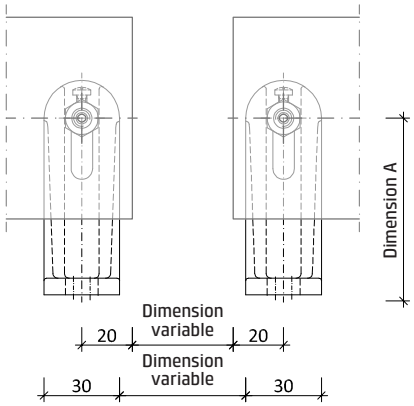

Division of venetian blind with standard tensioning cord holders with transverse plate for accepting 2 tensioning cords

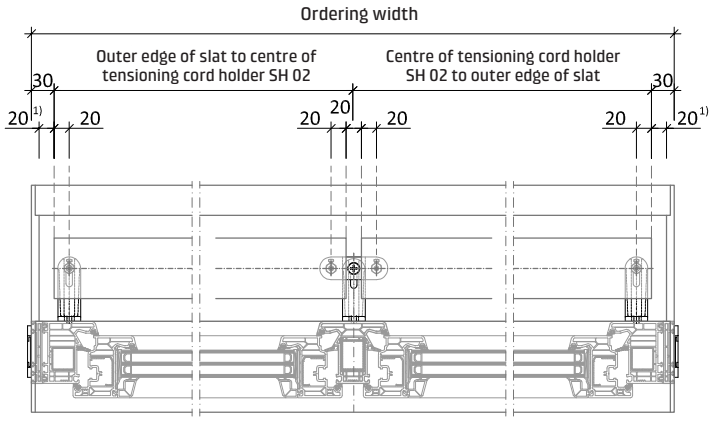

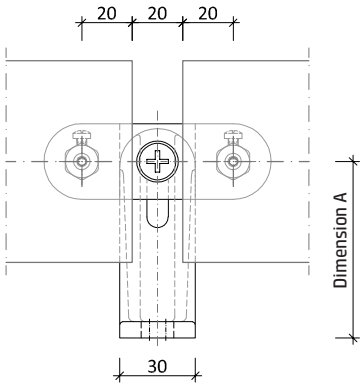

[1)] Recommendation: 20 mm distance between external plaster and slats

CONCEPTS FOR SECURE WINDOW FASTENING

The secure, load-bearing fastening of windows is becoming increasingly difficult. The reasons for this are the use of triple glazing with weights of up to 40 kg/m² and wall materials that are becoming increasingly delicate and porous.
Since the design of conventional roller shutter and venetian blind boxes does not allow window frame fastening in the upper area, all acting loads have to be absorbed via the lateral fastenings. However, many window systems can hardly accept these loads.

Upward fastening of the window is not possible without the correct choice of box with a corresponding fastening concept. Consequently, the static verification of the window is made considerably more difficult, as the window must provide the statics alone.

The STABILUM fastening concepts offer a wide range of adequate solutions for use in Beck+Heun built-in and top-mounted boxes. On the one hand, it contains a simple bracket and stabilisers for fixing and stiffening the window – without static verification. On the other hand, the range contains highly stable static brackets that can be used for the static verification of the window fastening. They are tested and safely dissipate the loads from wind (pressure and suction) as well as impact loads. STABILUM also offers the option of vertical window fastening. A function that pays off especially with lift and slide systems, as smooth running of the system can thus be guaranteed.



STABILUM FASTENING CONCEPT

Solutions for strengthening or load dissipation

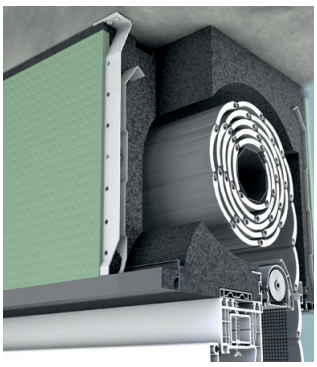

STABILUM DB ceiling fastening

- Standard solution
- Additional fastening to the window lintel or the ceiling
- Use with divided elements
- For balcony windows and doors

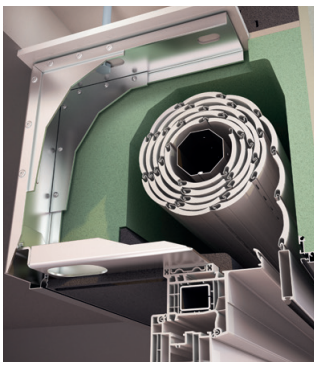

STABILUM SK stabilisation brackets

- Absorbance and dissipation of wind loads into the building structure
- Most secure fastening of windows in conjunction with a roller shutter or venetian blind box from Beck+Heun
- 4 mm sheet metal, riveted

Degree of stabilisation

	Simple window fixing	Simple window fastening	Vertical window adjustment	Dissipation of wind loads	Dissipation of impact loads	Dissipation of loads from fall-protection systems [1]
STABILUM DB	✓		✓[4]			
STABILUM SK	✓	✓	✓[2]	✓	✓	✓

Usage possibilities [3]

	ROKA-TOP® 2 PLUS ROKA-TOP® 2 ROKA-TOP® 2 EX	ROKA-TOP® 2 RG (ZIP) ROKA-TOP® 2 EX RG ROKA-TOP® NEOLINE 2 RG	ROKA-TOP® 1 SHADOW ROKA-TOP® 2 SHADOW ROKA-TOP® 2 (EX) SHADOW
STABILUM DB	✓/ ✓ /✓	✓/ ✓ /✓	✓/ ✓ /✓
STABILUM SK	✓/ ✓ /✓	✓/ ✓ /✓	✓/ ✓ /✓

[1] Only with ROKA-TOP® 2 RG (including ZIP variant), ROKA-TOP® 1 SHADOW and ROKA-TOP® 2 SHADOW
[2] Only with ROKA-TOP® 2 PLUS
[3] Not possible with AIRFOX® variants
[4] Without static verification

STABILUM DB
Ceiling fastening

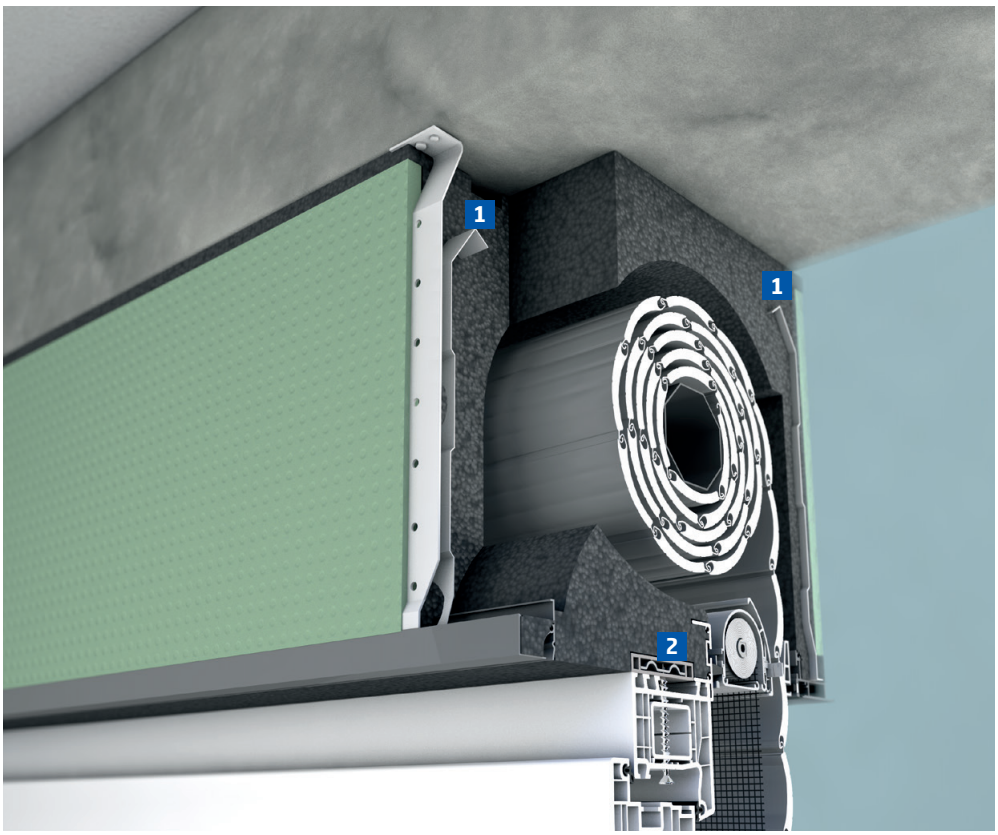



Simple fastening
STABILUM DB is integrated interference-free and insulated in the box leg. Fastening to the lintel or ceiling is simple due to the special geometry in the upper part.

1 Reinforcement
Maximum stability thanks to foamed-in PLATINUM® reinforcing inlays.

2 Best possible window fixing
Thanks to steel-reinforced window fixing rail.

FORCE-FIT UPWARD SCREW FASTENING

STABILUM DB is the secure standard solution when it comes to fastening top-mounted roller shutter or venetian blind boxes. This STABILUM solution is used for force-fit fastening to the window lintel or the ceiling. STABILUM DB shows its strengths to the full with divided elements, because with divisions, loads occur on the dividing board that must not be borne by the window. By means of STABILUM DB, these loads are transmitted to the building structure and the window is not loaded. STABILUM DB is used with larger elements for additional fastening of the box. This is recommended in particular with long elements. The ceiling fastening is always integrated with divisions from the ROKA-TOP® 2 series (including EX and RG) and is also optionally available on request.

Load cases	
✓	Simple window fixing
-	Simple window fastening
✓	Vertical fastening and adjustment
-	Wind load dissipation (pressure and suction)
-	Impact load dissipation
-	Dissipation of impact loads from fall protection systems

WINDOW RELIEVED

- Loads securely transmitted into the masonry in case of divisions
- Screw - done
- Inconspicuously integrated

STABILUM SK

Stabilisation brackets

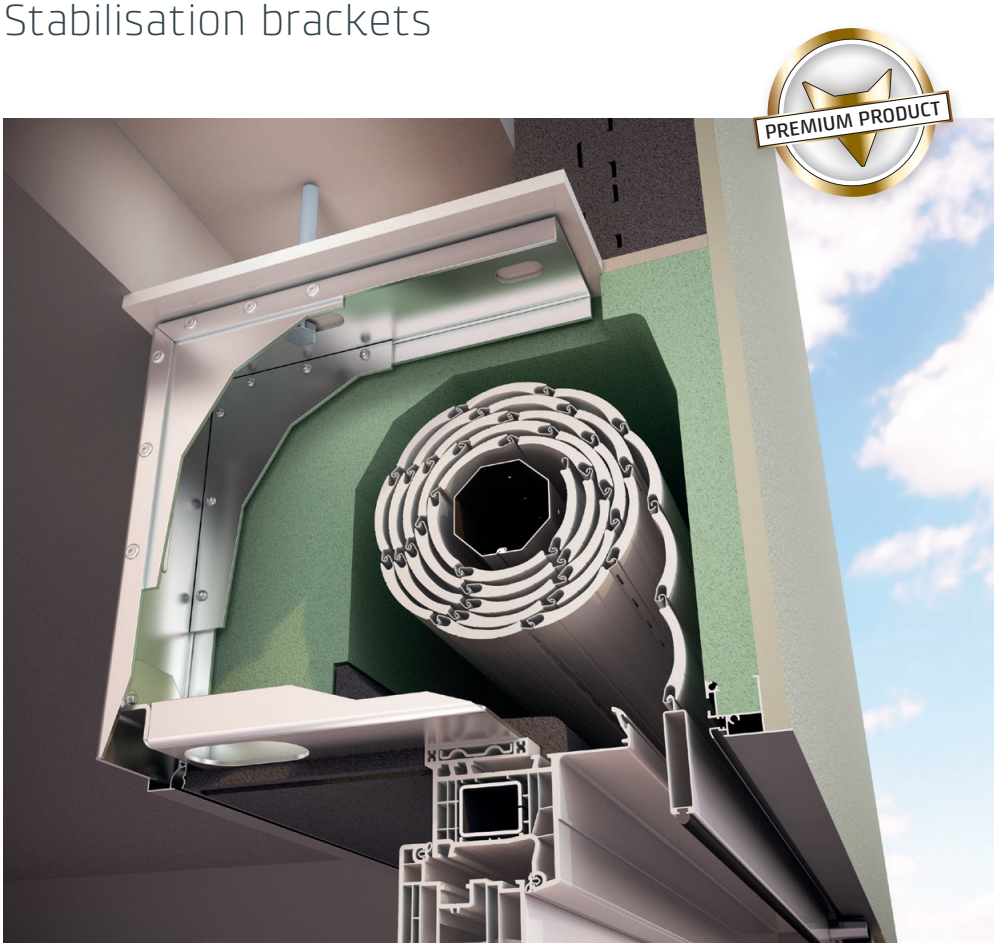



STABILUM SK
STABILUM SK for top-mounted boxes is underlaid pressure-resistant during installation and firmly screwed to the building structure towards the lintel or ceiling. Optimally defined screw points ensure proper fastening to the building structure. The design allows both straight and right-angled screwing – according to the specifications of the screw manufacturer.

THE TESTED PREMIUM SOLUTION

STABILUM SK provides the most secure fastening of windows in conjunction with a top-mounted box. Firmly connected to the building structure, the brackets integrated in the box can dissipate both wind and impact loads into the masonry. The number of brackets to be used in the roller shutter or venetian blind box depends on the window dimensions and the precise division of the window elements.

Load cases	
✓	Simple window fixing
✓	Simple window fastening
✓	Vertical fastening and adjustment
✓	Wind load dissipation (pressure and suction)
✓	Impact load dissipation
✓	Dissipation of impact loads from fall protection systems

*Adjustment possible only in ROKA-TOP® 2 PLUS top-mounted box

SAFE ALL-ROUND

- All-round window fastening according to RAL guidelines
- Standard-compliant screw connections in the building structure
- For virtually all box variants and sizes
- Tested system
- Tested load absorption for fall protection systems

STABILUM SK
Dimensions

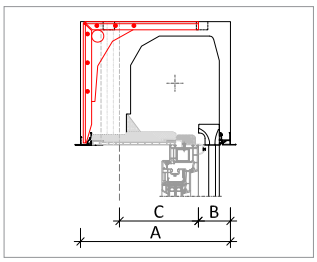

ROKA-TOP® 2 PLUS ROKA-TOP® 2	Plaster version				ETICS version				Brick version			
A Box width	280	300	345	365	280	300	345	365	280	300	345	365
B Window seat from external side of box *	78	78	78	78	64	64	64	64	51	51	51	51
C max. possible window frame thickness*	107	127	172	192	121	141	186	206	134	154	199	219

*with guide rail depth 51 mm

Dimensions in mm

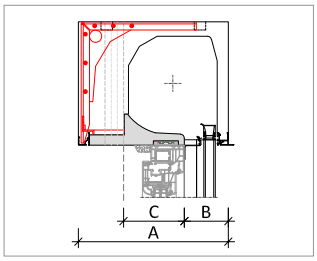

ROKA-TOP® 2 (EX) RG	Plaster version				ETICS version				Brick version			
A Box width	280	300	345	365	280	300	345	365	280	300	345	365
B Window seat from external side of box *	107	107/127			93/113				80/110			
C max. possible window frame thickness*	78	98/78	143/123	163/143	92/72	112/92	157/137	177/157	105/85	125/105	170/150	190/170

*dependent on the inspection opening, for which there is a choice of 80 mm or 100 mm

Dimensions in mm

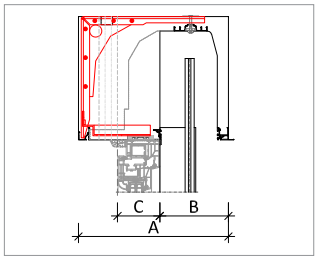

ROKA-TOP® 2 (EX) SHADOW	Plaster version		ETICS version		Brick version	
A Box width	345	365	345	365	345	365
B Window seat from external side of box	167	167	150	150	150	150
C max. possible window frame thickness	83	103	100	120	100	120

Dimensions in mm

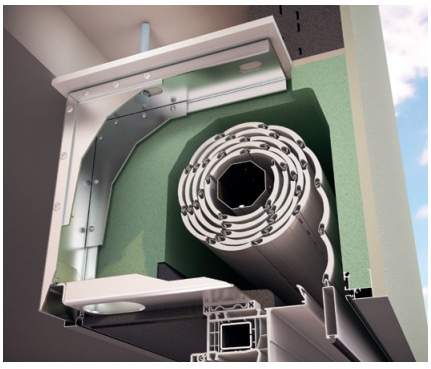

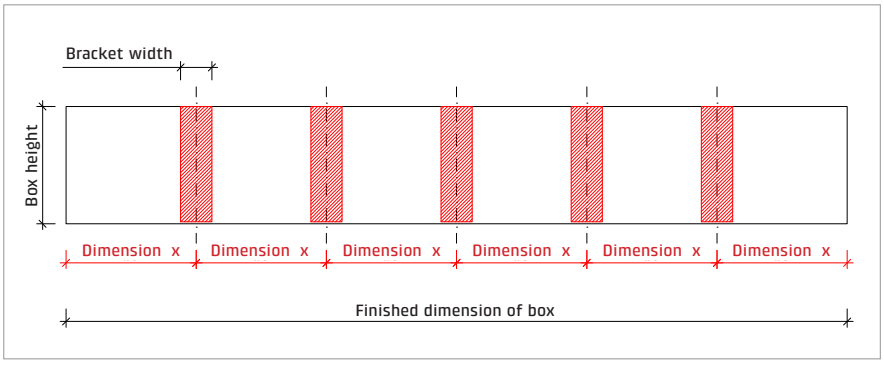

The stabilisation bracket STABILUM SK integrated in the box serves to absorb and dissipate wind loads into the building structure and fulfils at least wind class C3 according to EN 12210/12211. The brackets are distributed in the box with even spacing (dimension x). The dimension x depends on the window dimensions and the number of brackets in the box.

The dimension x may not be less than 600 mm, or 300 mm in the edge area.

Dissipation of impact loads from fall protection systems

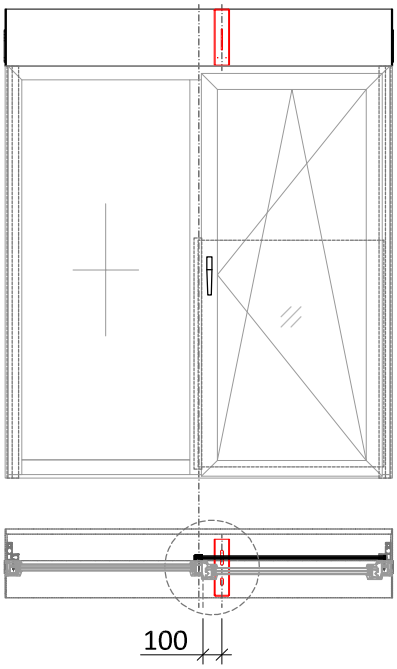

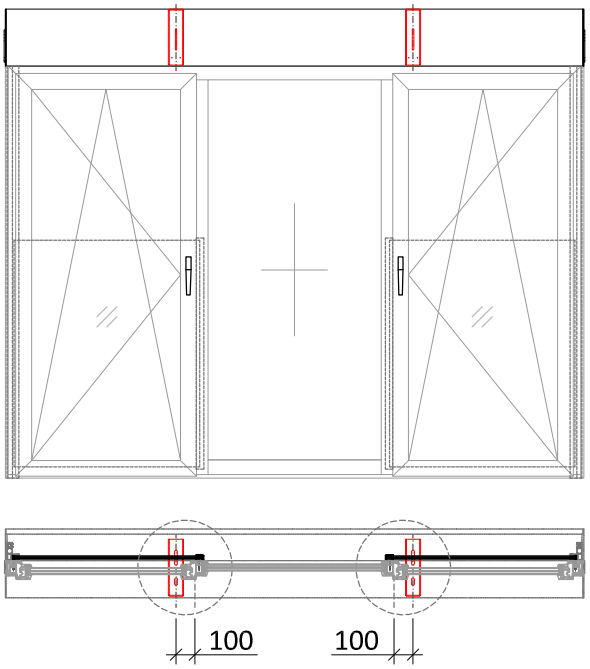

Optional

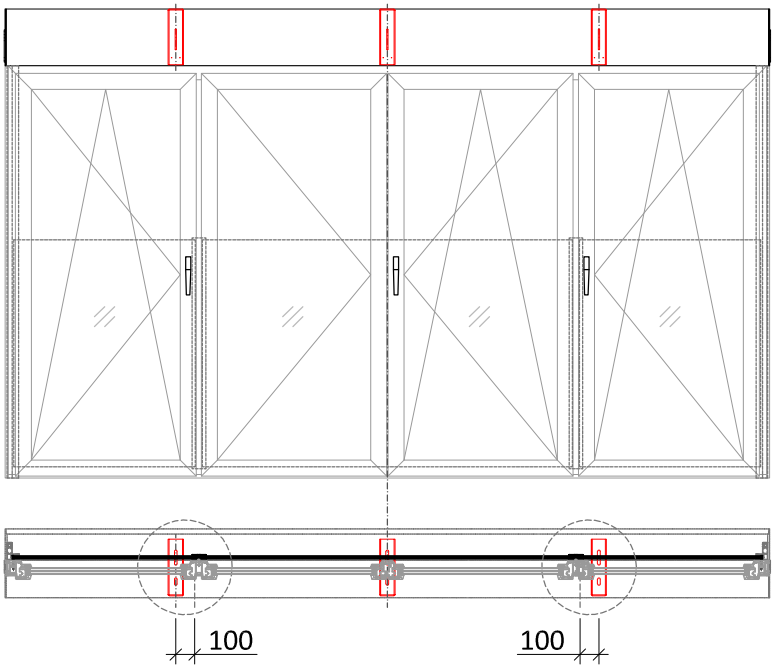

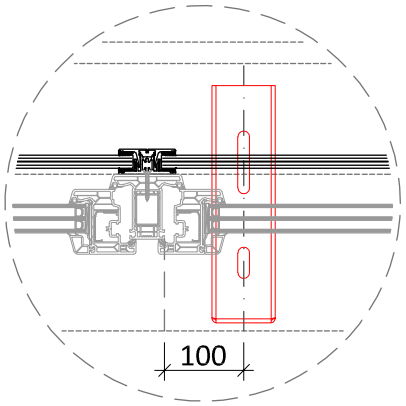

STABILUM SK

Fastening and window screw connection

Fastening

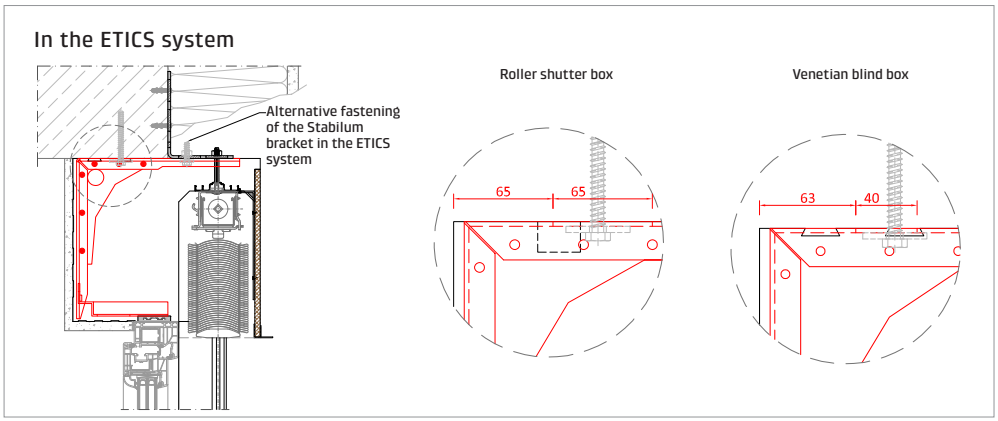

Window screw connection

For roller shutter boxes with closing cover on the room side

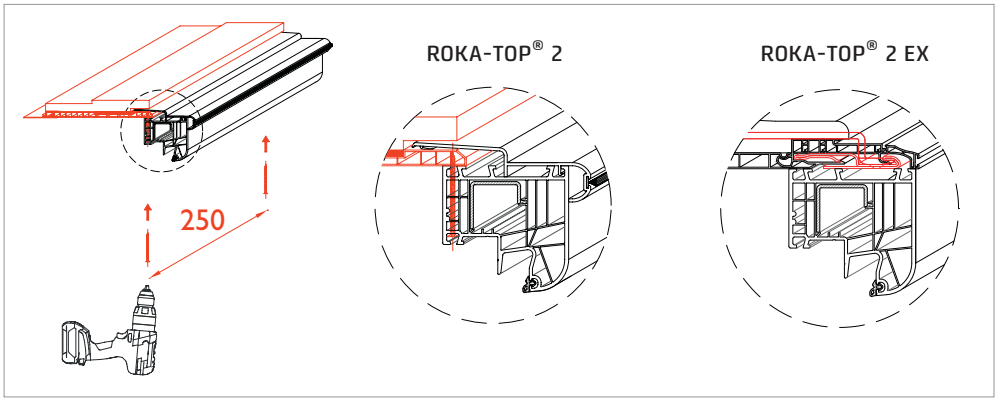

Installation takes place with the BTX fibre-reinforced closing cover. The window frame must be screwed upwardly to the closing cover every 250 mm, and the latter must be glued into the adapter profile C70.

For roller shutter and venetian blind boxes closed on the room side (RG)

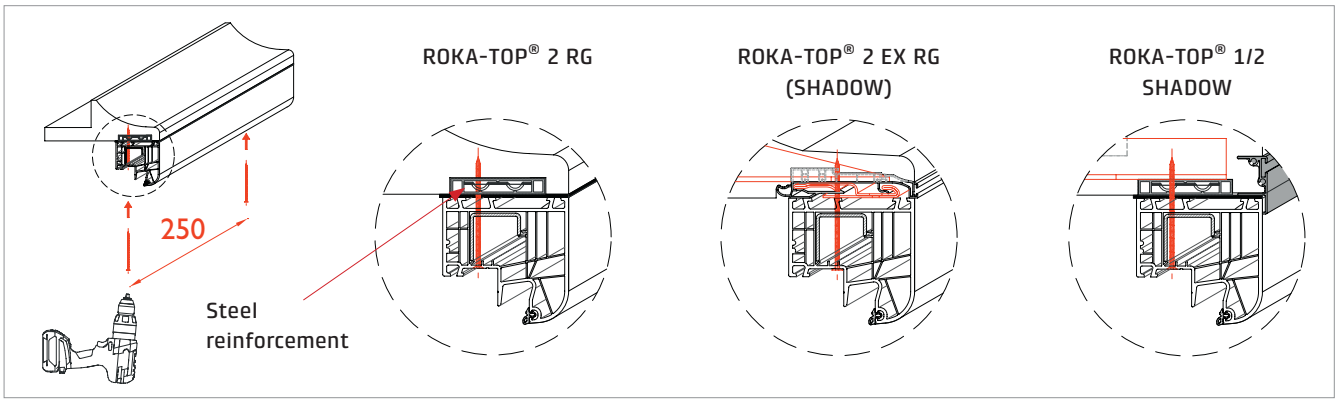

When using the STABILUM SK stabilisation bracket, the upper window frame must be screwed to the steel-reinforced window fixing rail every 250 mm.







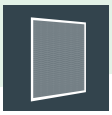


Beck+Heun GmbH

Mengerskirchen Headquarters
Reinhold-Beck-Strasse 2
D-35794 Mengerskirchen

South Branch
Industriestrasse 2
D-86450 Altenmünster

Erfurt Branch
Stotternheimer Strasse 10
D-99086 Erfurt